WTC
DRAWING BOOK 9
AB 18–3 — B 23–1

YITC @ LEERA BOOK BOX 4A

↓

BOX 04A

↓

BOOK 9 2 OF 2

141

WTCI-31-LERA

SKILLING, HELLE, CHRISTIANSEN, ROBERTSON — Structural & Civil Engineers

PROJECT: THE WORLD TRADE CENTER | TITLE: FL. 107-PH CONNECTION DETAILS - LINES 04 & 05 | DATE: 4-1-70

REVISIONS

7/9/70

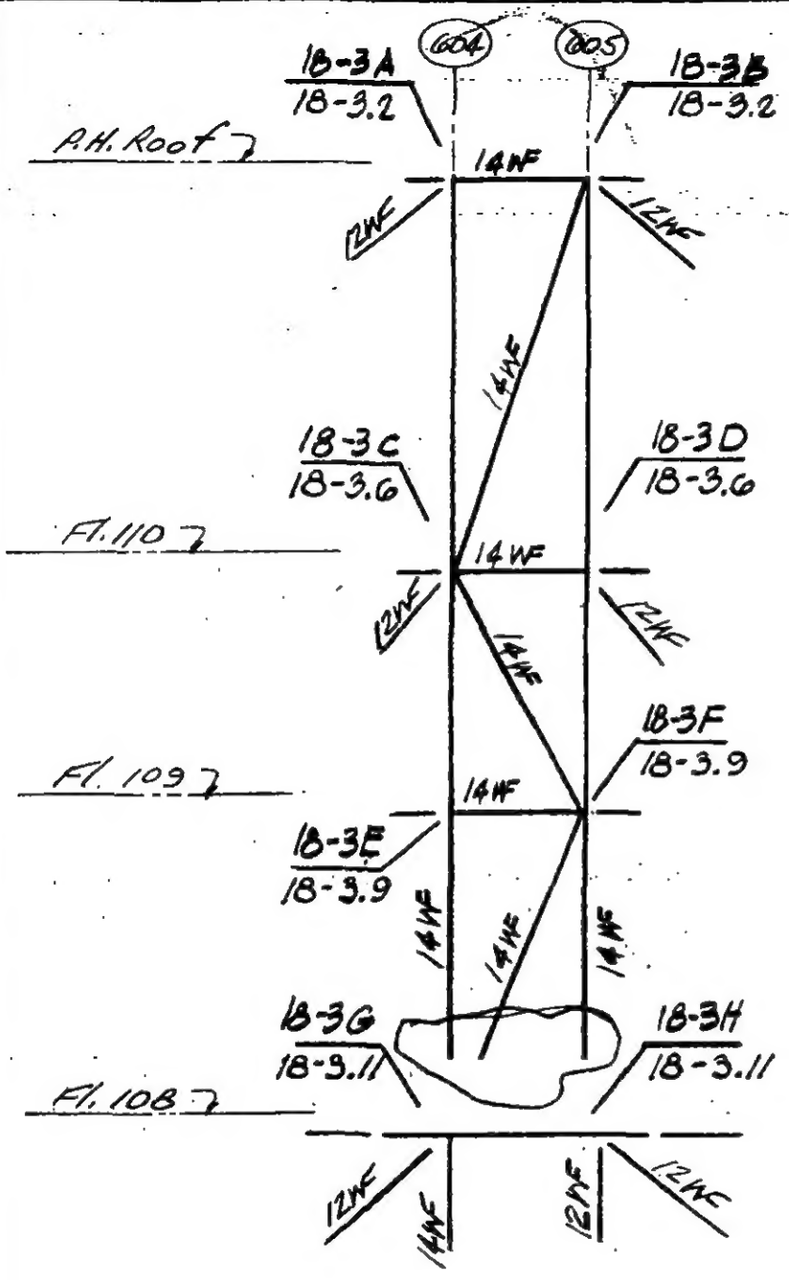

DETAIL 18-3

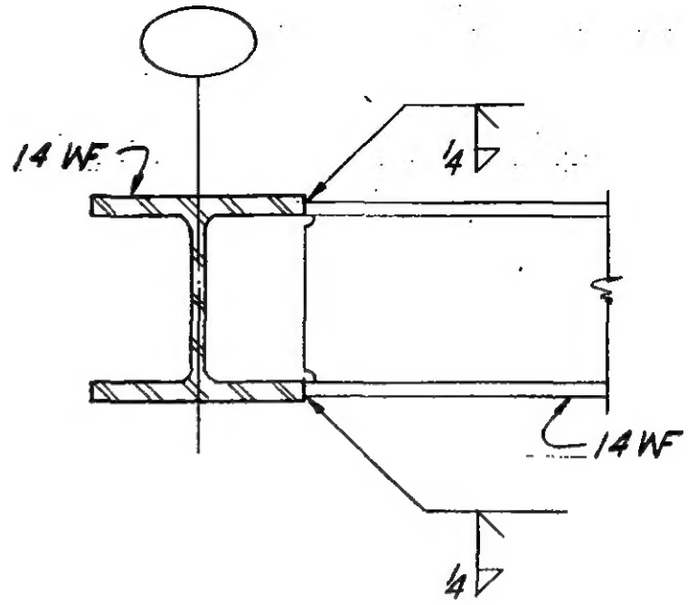

Detail (1)

DESIGNED

DRAWN
P.M. Ozeki

REVIEWED
E. Drakos

9-AB 18-3.1

SKILLING, HELLE, CHRISTIANSEN, ROBERTSON — Structural & Civil Engineers

PROJECT THE WORLD TRADE CENTER | TITLE FL 107 - PH CONNECTION DETAILS - LINES 04 & 05 | DATE 4 - 1 - 70

REVISIONS

7 -10 - 70

VOID ~~7 - 29 - 70~~

7-10 - 70

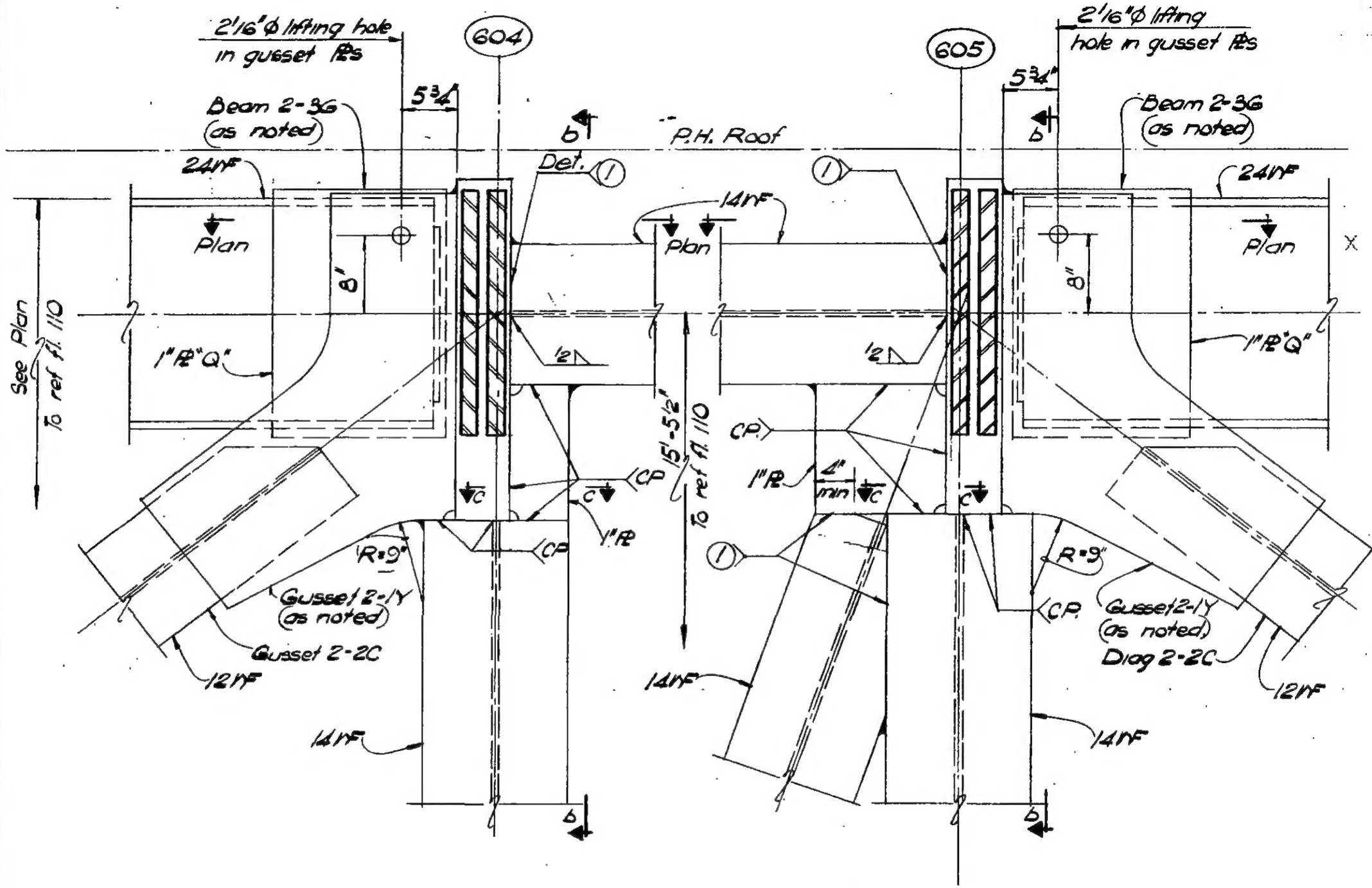

Section a - a
DETAIL 18-3A

Section a - a
DETAIL 18-3B

LICENSED PROFESSIONAL ENGINEER — LESLIE E. ROBERTSON — No. 34860 — UNIVERSITY OF THE STATE OF NEW YORK

DESIGNED

DRAWN W. Clarke

REVIEWED E. Drakos

9-AB18-3.2

SKILLING, HELLE, CHRISTIANSEN, ROBERTSON — Structural & Civil Engineers

PROJECT THE WORLD TRADE CENTER | TITLE FL 107-PH CONNECTION DETAILS - LINES 04 & 05 | DATE 4-1-70

REVISIONS

7-10-70
Void ~~9-25-70~~
7-10-70

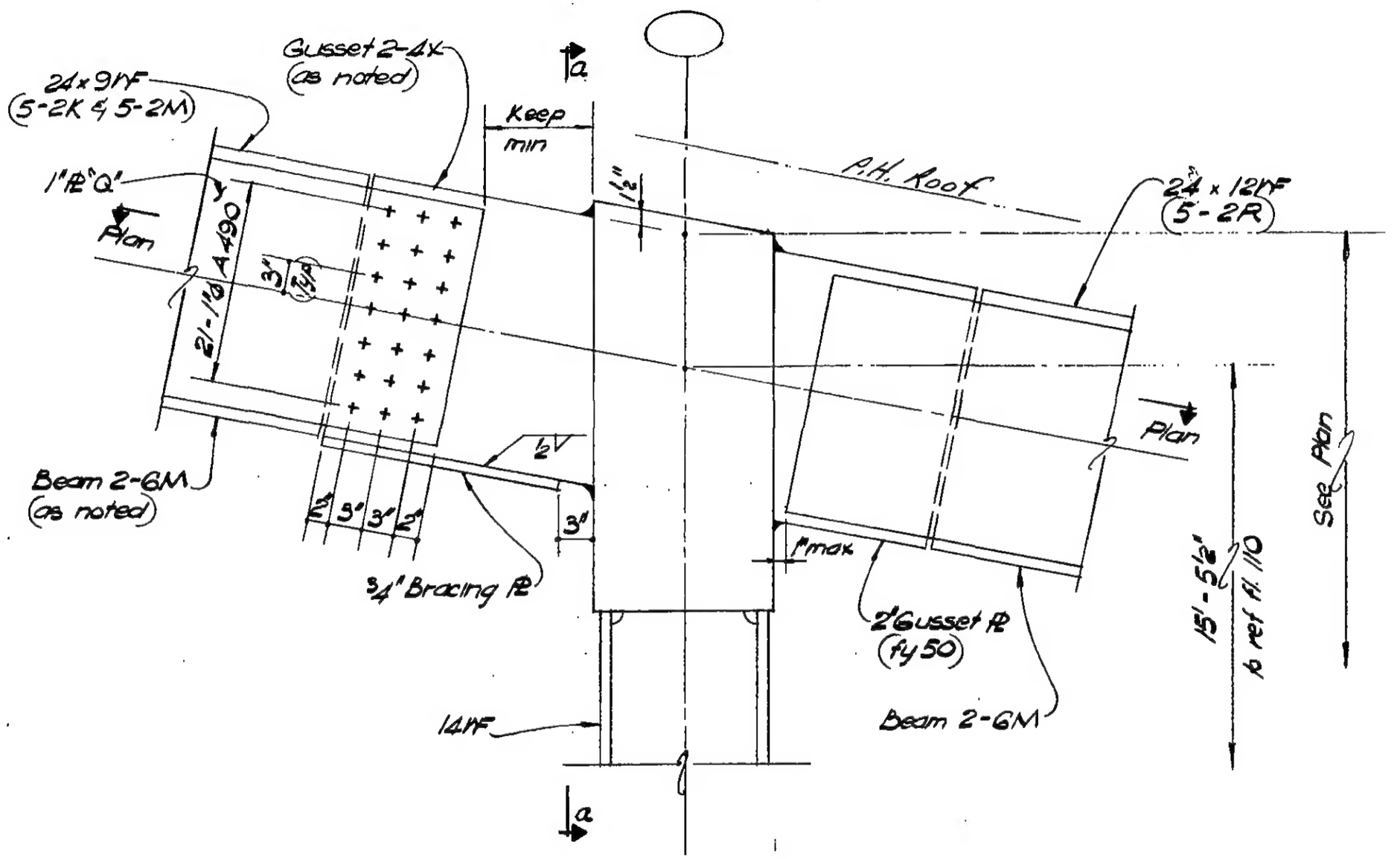

Section b-b

LICENSED PROFESSIONAL ENGINEER LESLIE E. ROBERTSON No. 34360 UNIVERSITY OF THE STATE OF NEW YORK

16

DESIGNED

DRAWN W. Clarke

REVIEWED E. Orakos

9-AB18-3.3

SKILLING, HELLE, CHRISTIANSEN, ROBERTSON — Structural & Civil Engineers

PROJECT THE WORLD TRADE CENTER | TITLE FL 107 - PH CONNECTION DETAILS - LINES 04 & 05 | DATE 4-1-70

REVISIONS

7-10-70

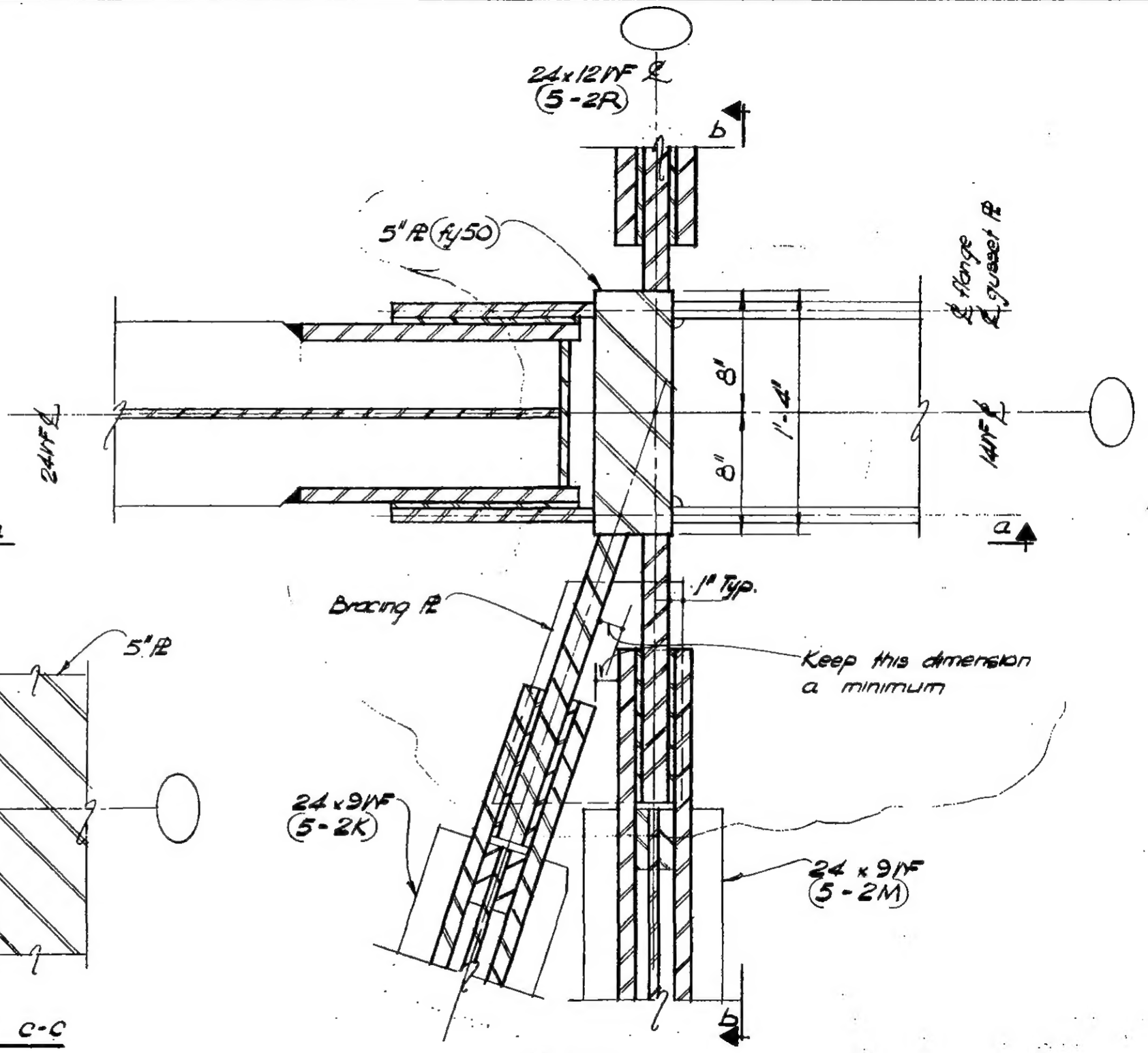

PLAN

DETAIL 18-3A (Col 604) as shown
DETAIL 18-3B (Col 605) opp hand

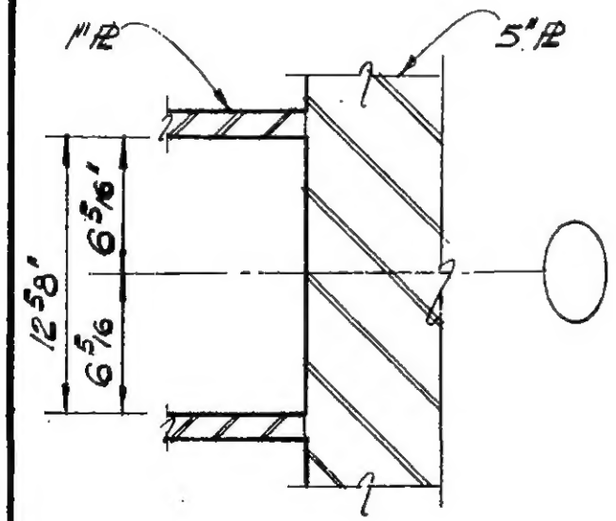

Section C-C

LICENSED PROFESSIONAL ENGINEER
LESLIE E. ROBERTSON
No. 34360
UNIVERSITY OF THE STATE OF NEW YORK

17

DESIGNED

DRAWN
M. Clarke

REVIEWED
E. Drakos

9 - AB/8 - 3/4

SKILLING, HELLE, CHRISTIANSEN, ROBERTSON — Structural & Civil Engineers

PROJECT: THE WORLD TRADE CENTER | TITLE: FL. 107-PH CONNECTION DETAILS-LINES 04&05 | DATE: 4-1-70

REVISIONS

7/9/70

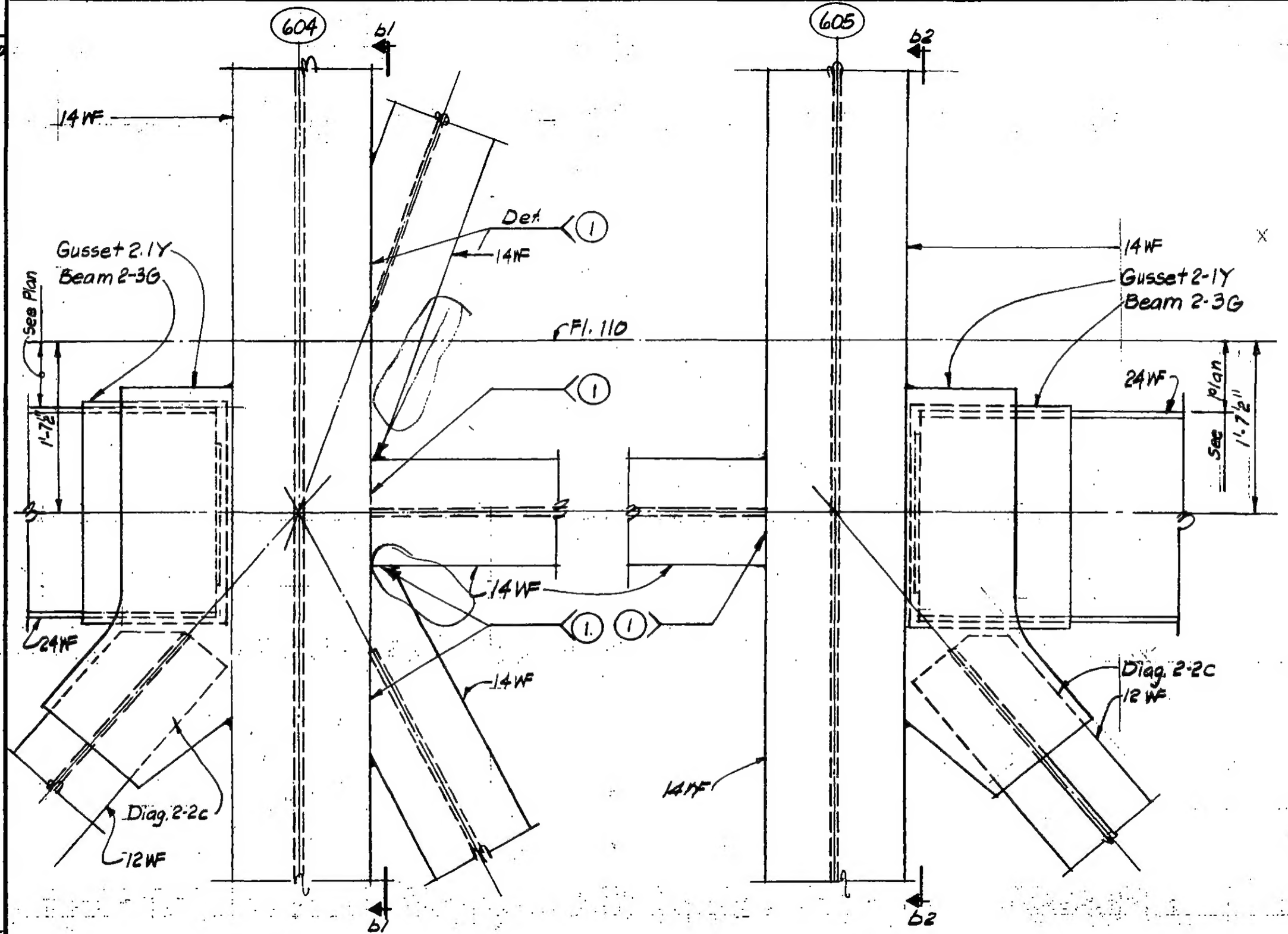

Section a-a
DETAIL 16-3C

Section a-a
DETAIL 16-3D

LICENSED PROFESSIONAL ENGINEER — LESLIE E. ROBERTSON — No. 34360 — UNIVERSITY OF THE STATE OF NEW YORK

DESIGNED

DRAWN: P.M. Dzeki

REVIEWED: E. Drakos

9-AB 16-3.6

SKILLING, HELLE, CHRISTIANSEN, ROBERTSON — Structural & Civil Engineers

PROJECT: THE WORLD TRADE CENTER | TITLE: FL.107-P.H CONNECTION DETAILS-LINES 04 & 08 | DATE: 4-1-70

REVISIONS
7/9/70

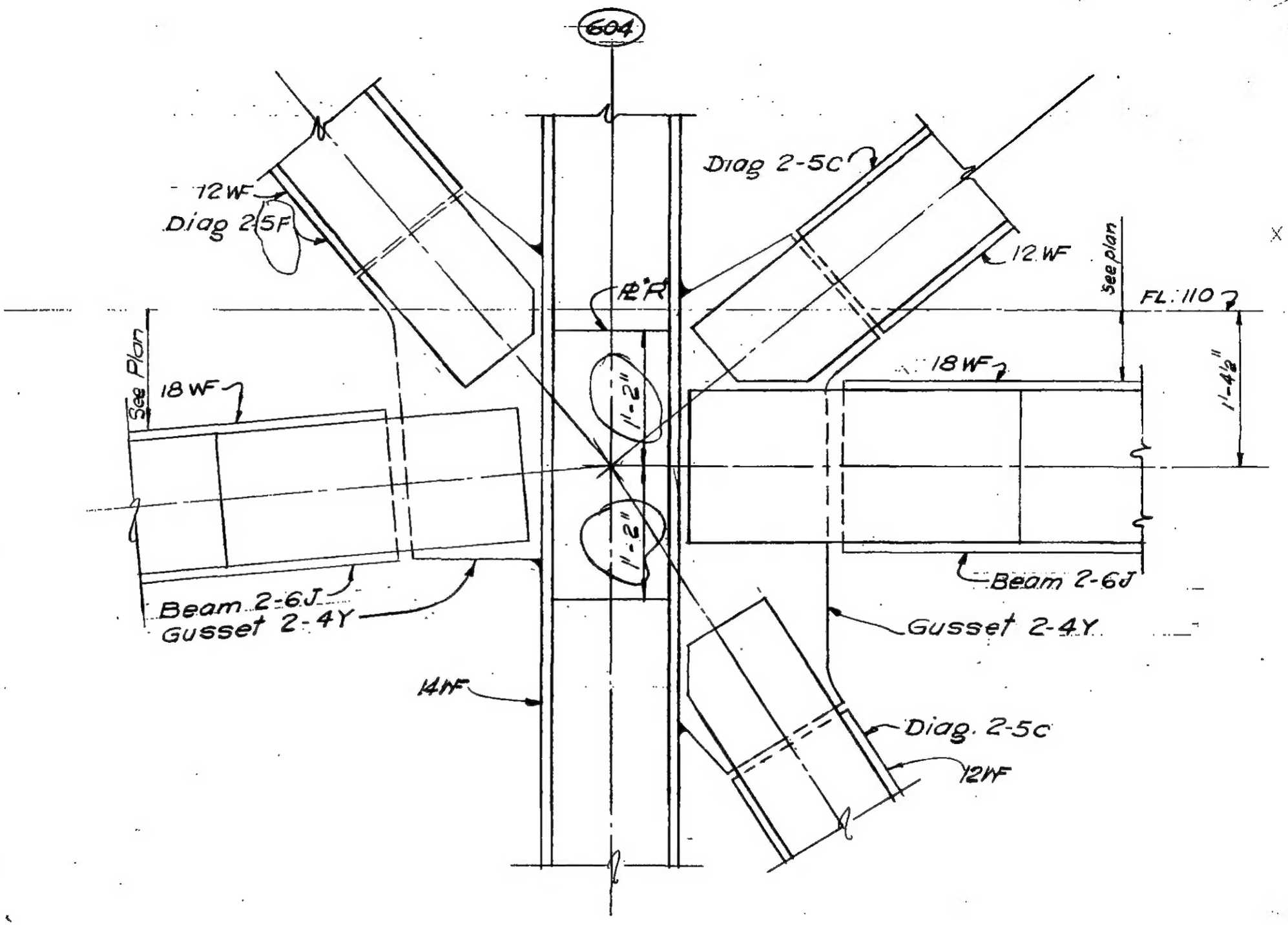

Section b1-b1

LICENSED PROFESSIONAL ENGINEER — LESLIE E. ROBERTSON — NO. 34360 — UNIVERSITY OF THE STATE OF NEW YORK

DESIGNED

DRAWN V.H.A

REVIEWED E. Dranos

9-AB18-3.7

SKILLING, HELLE, CHRISTIANSEN, ROBERTSON — Structural & Civil Engineers

PROJECT	TITLE	DATE
THE WORLD TRADE CENTER	FL. 107-PH. CONNECTION DETAILS - LINES 04 & 05	4-1-70

REVISIONS

7/9/70

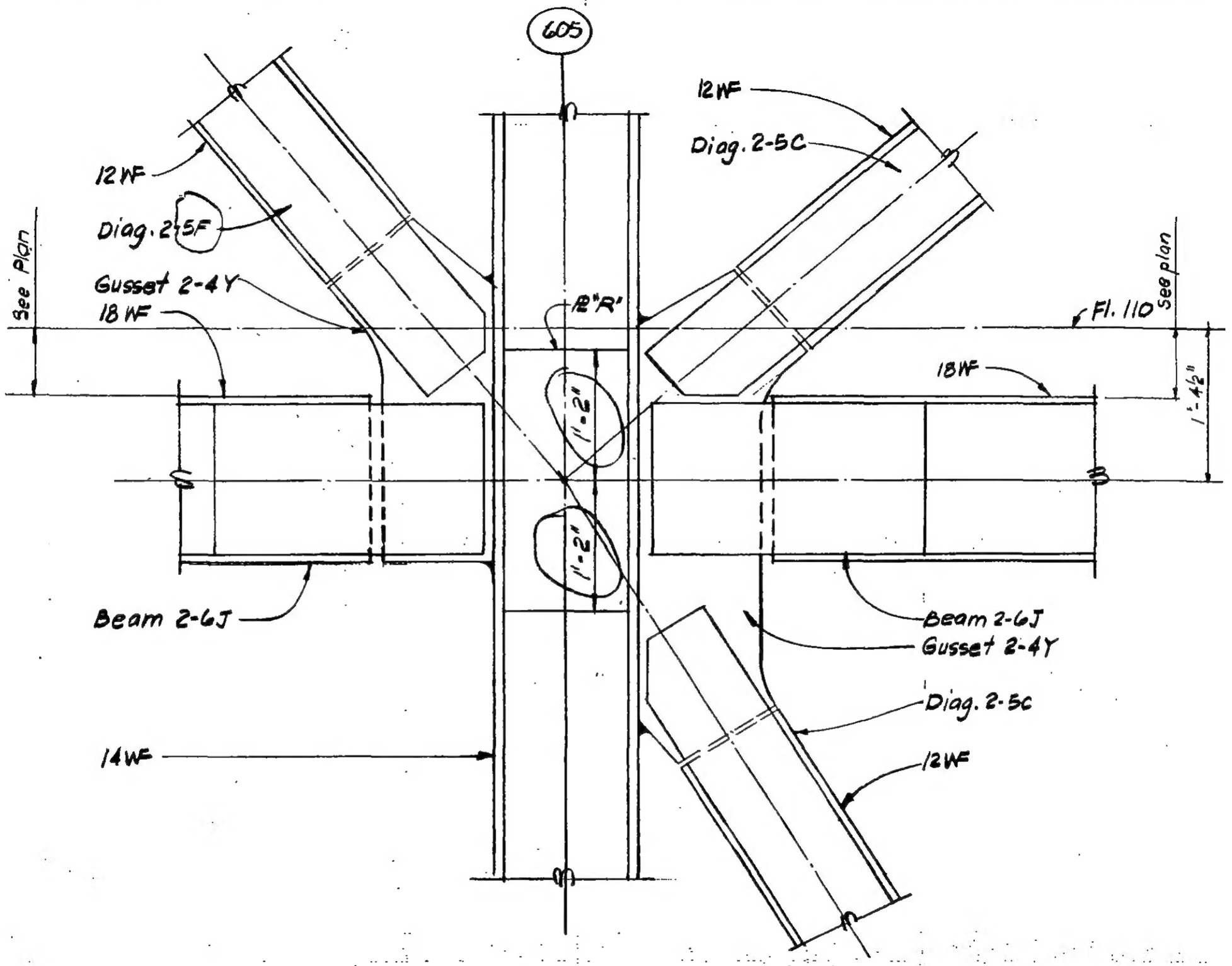

Section b2-b2

LICENSED PROFESSIONAL ENGINEER — LESLIE E. ROBERTSON — No. 34360 — UNIVERSITY OF THE STATE OF NEW YORK

DESIGNED

DRAWN P.M. Ozek

REVIEWED E. Dranos

9-AB.18-38

SKILLING, HELLE, CHRISTIANSEN, ROBERTSON — Structural & Civil Engineers

PROJECT: THE WORLD TRADE CENTER | TITLE: FL. 107-PH. CONNECTION DETAILS-LINES 04 & 05 | DATE: 4-1-70

REVISIONS

7/8/70

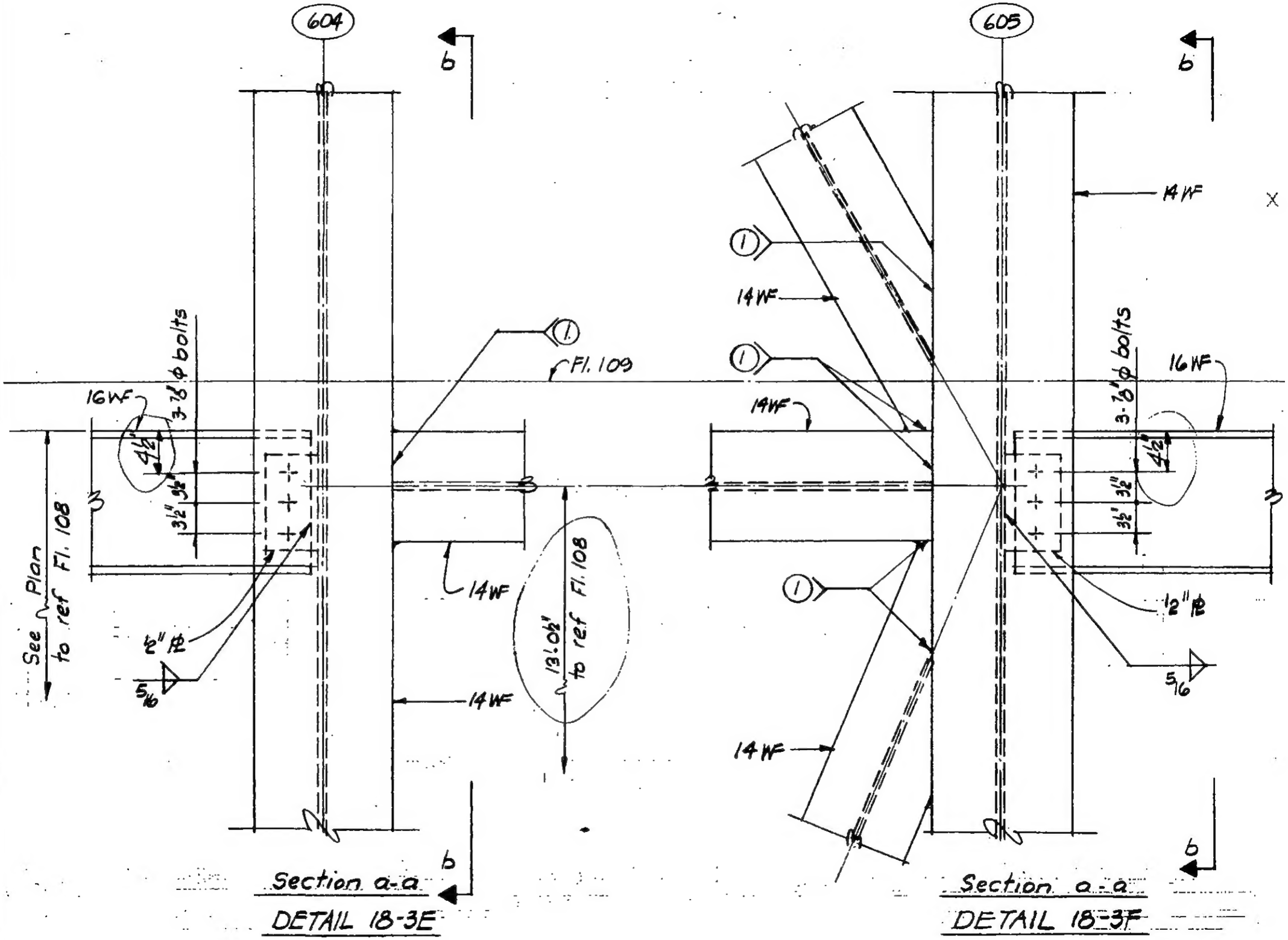

LICENSED PROFESSIONAL ENGINEER — LESLIE E. ROBERTSON — No. 34360 — UNIVERSITY OF THE STATE OF NEW YORK

DESIGNED

DRAWN: P.M. Ozeki

REVIEWED: E. Drakos

9-AB 18-39

SKILLING, HELLE, CHRISTIANSEN, ROBERTSON — Structural & Civil Engineers

PROJECT: THE WORLD TRADE CENTER | TITLE: FL. 107-PH. CONNECTION DETAILS - LINES 04 & 05 | DATE: 4-1-70

REVISIONS

7/8/70

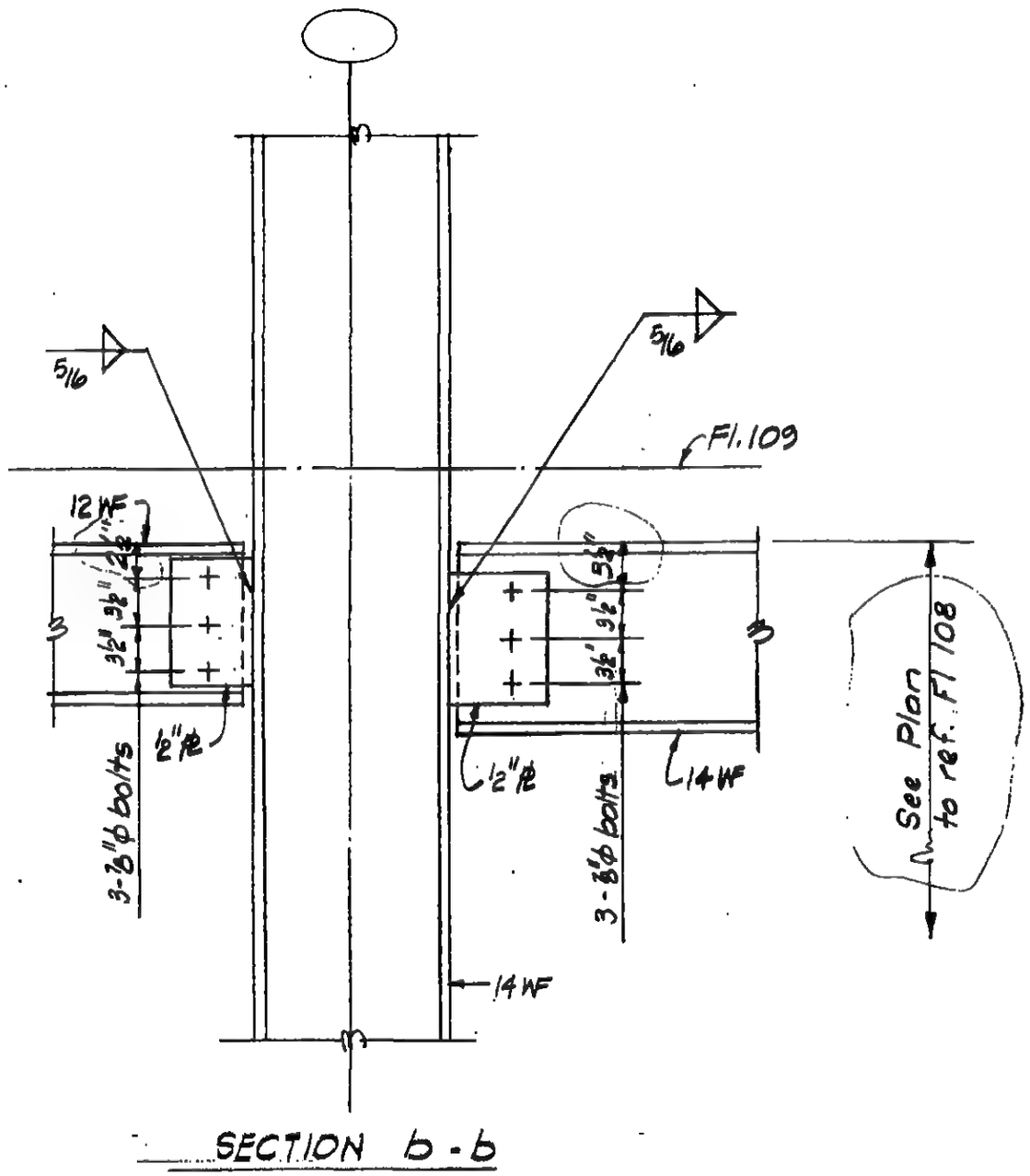

SECTION b-b

LICENSED PROFESSIONAL ENGINEER
LESLIE E. ROBERTSON
No. 34360
UNIVERSITY OF THE STATE OF NEW YORK

DESIGNED

DRAWN
P.M. Ozeki

REVIEWED
E. Drakos

9-AB 18-3.10

SKILLING, HELLE, CHRISTIANSEN, ROBERTSON — Structural & Civil Engineers

PROJECT: THE WORLD TRADE CENTER | TITLE: FL. 107-PH CONNECTION DETAILS - LINES 04 & 05 | DATE: 4-1-70

REVISIONS

7/8/70

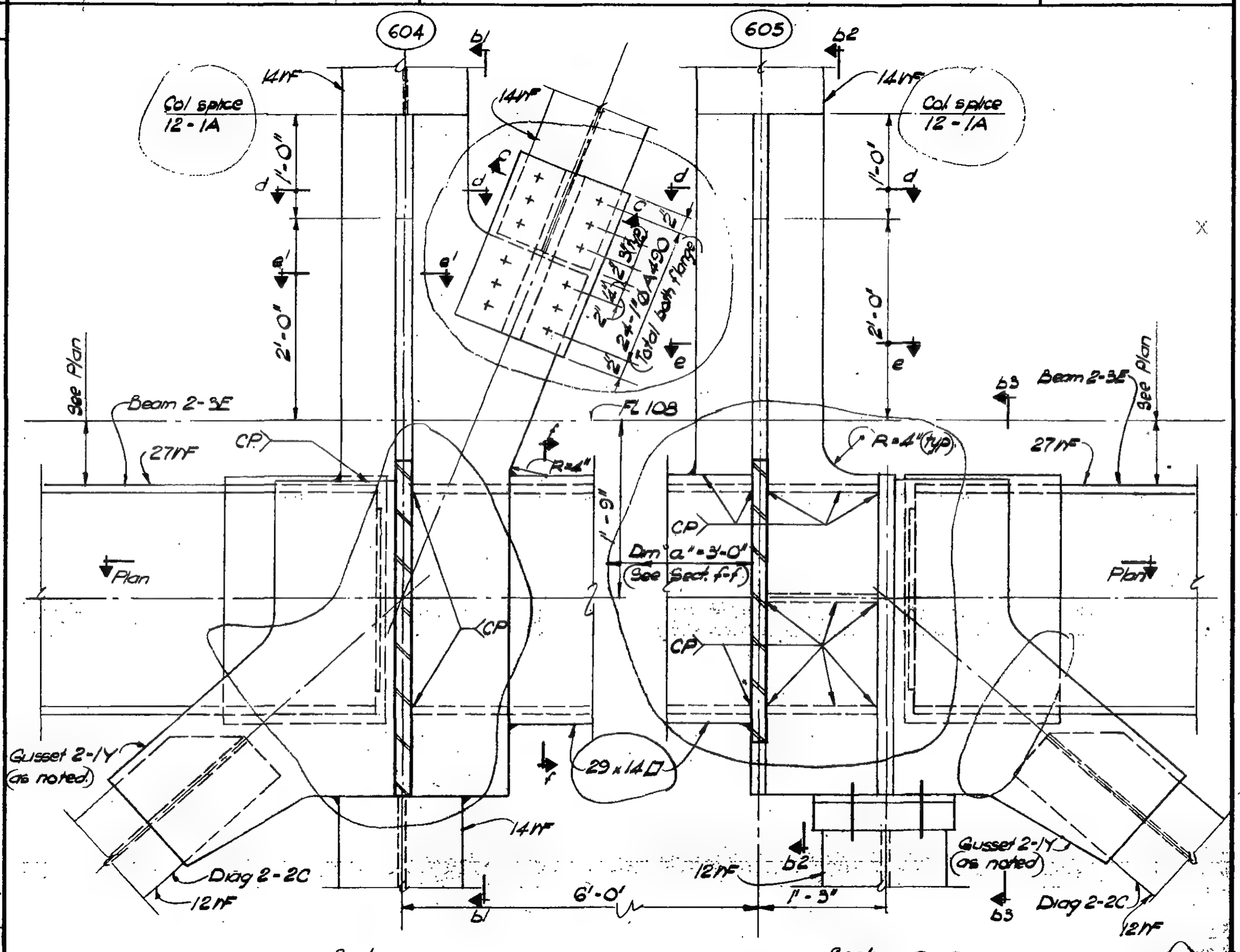

Section a-a
DETAIL 18-3G

Section a-a
DETAIL 18-3H

DESIGNED

DRAWN
F. Smith

REVIEWED
E. Drakos

9-AB/8-3.11

SKILLING, HELLE, CHRISTIANSEN, ROBERTSON — Structural & Civil Engineers

PROJECT THE WORLD TRADE CENTER | TITLE FL 107 - PH CONNECTION DETAILS - LINES 04 & 05 | DATE 4 - 1 - 70

REVISIONS

7/8/10

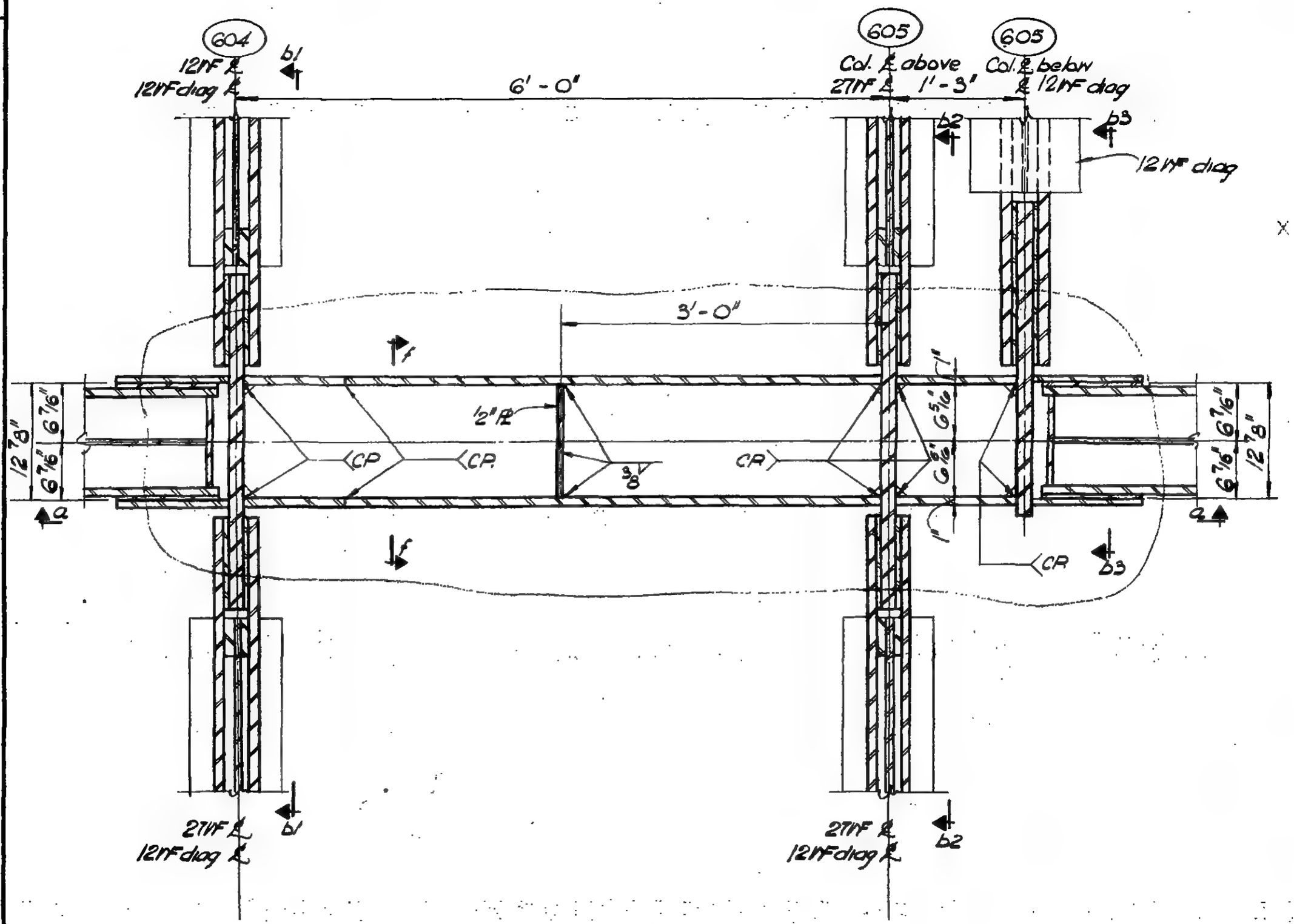

PLAN

DESIGNED

DRAWN W. Clarke

REVIEWED E. Dracos

9 - AB/8 - 3/12

SKILLING, HELLE, CHRISTIANSEN, ROBERTSON — Structural & Civil Engineers

PROJECT THE WORLD TRADE CENTER | TITLE FL 107 - PH CONNECTION DETAILS - LINES 04&05 | DATE 7/8/70

REVISIONS

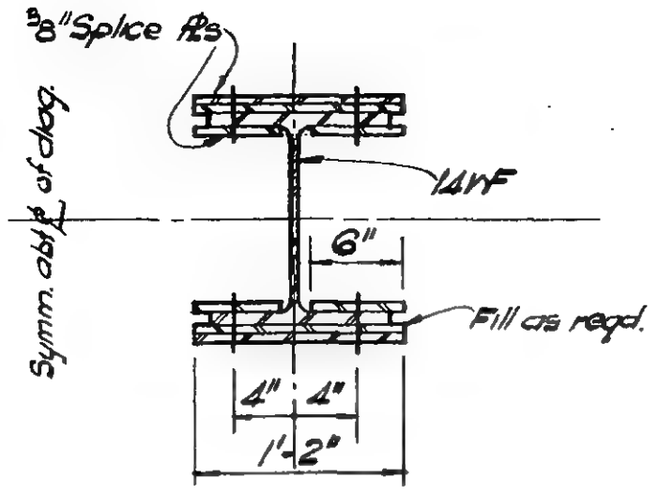

Section c-c

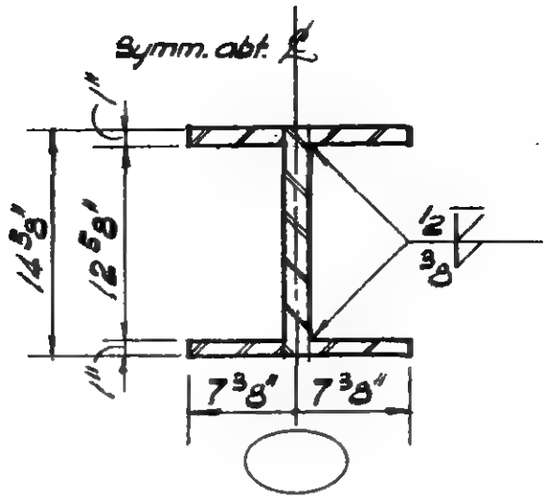

Section d-d

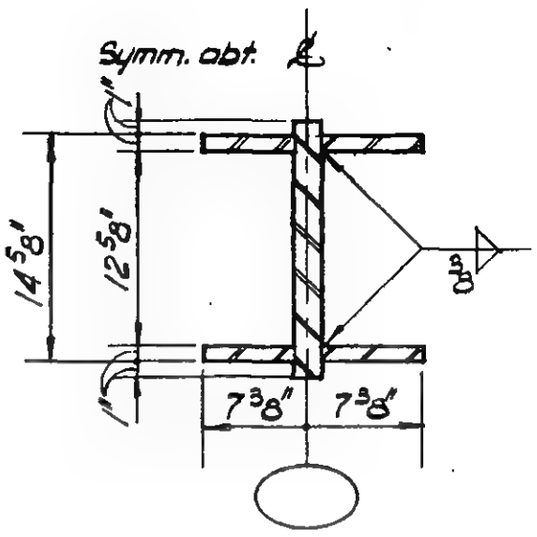

Section e-e (as shown)
Section e'-e' (similar)

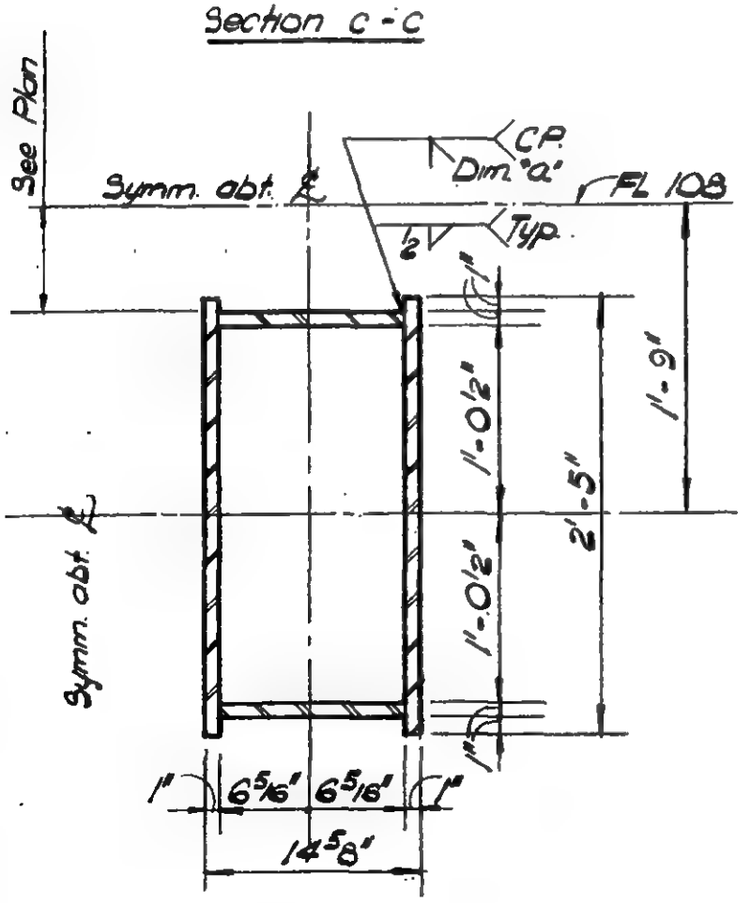

Section f-f
(29 x 140)

LICENSED PROFESSIONAL ENGINEER
LESLIE E. ROBERTSON
No 34360
UNIVERSITY OF THE STATE OF NEW YORK

DESIGNED

DRAWN
W. Clarke

REVIEWED
E. Drakos

9-AB/8-3.13

SKILLING, HELLE, CHRISTIANSEN, ROBERTSON — Structural & Civil Engineers

PROJECT: THE WORLD TRADE CENTER | TITLE: FL 107 - PH CONNECTION DETAILS-LINES 04 & 05 | DATE: 4/1/70

REVISIONS

7/8/10

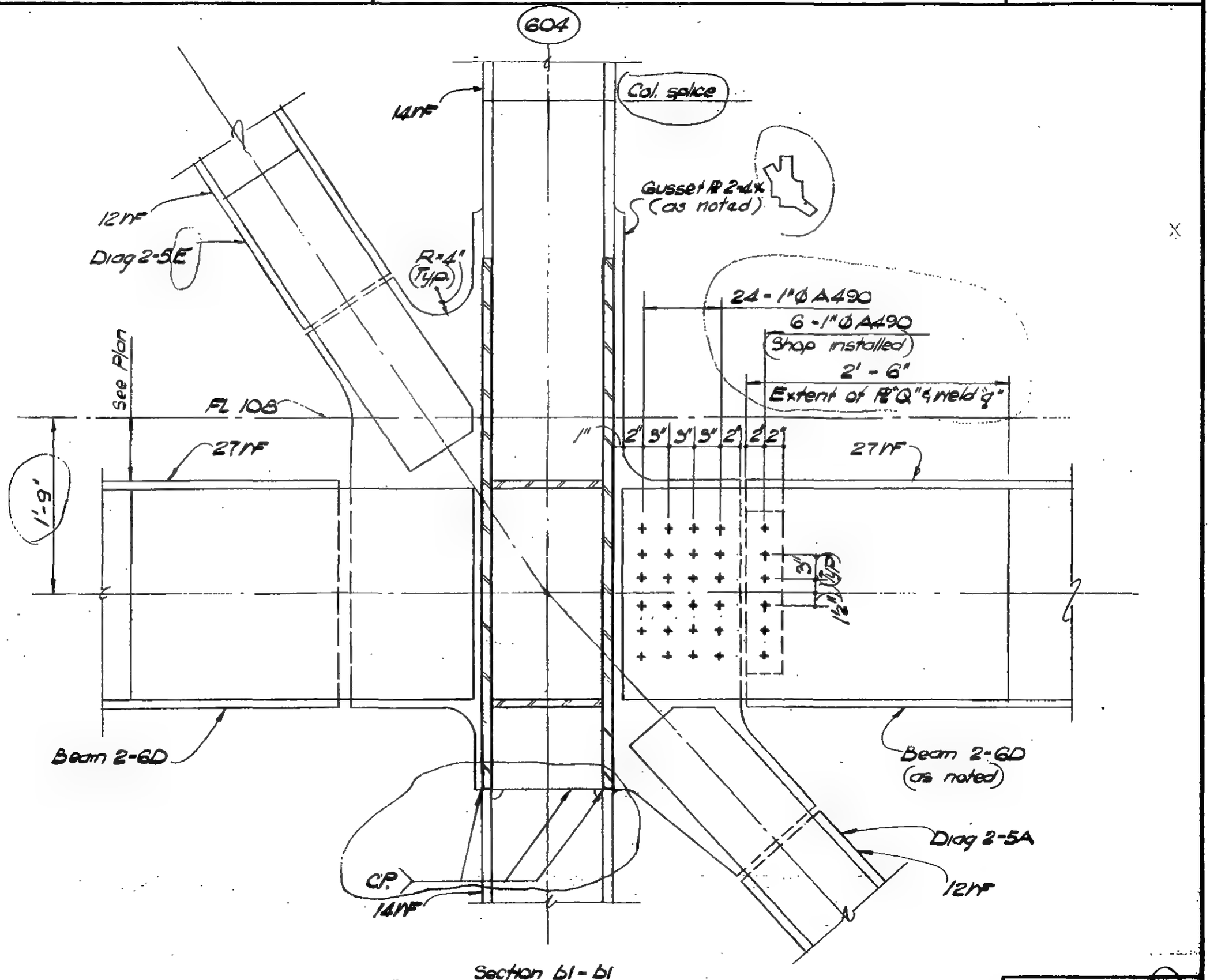

Section 61 - 61

DESIGNED

DRAWN: F. Smith

REVIEWED: E. Drakos

9 - AB18 - 3.14

SKILLING, HELLE, CHRISTIANSEN, ROBERTSON — Structural & Civil Engineers

PROJECT: THE WORLD TRADE CENTER | TITLE: FL 107 - PH CONNECTION DETAILS - LINES 04 & 05 | DATE: 4/1/10

REVISIONS

7/8/10

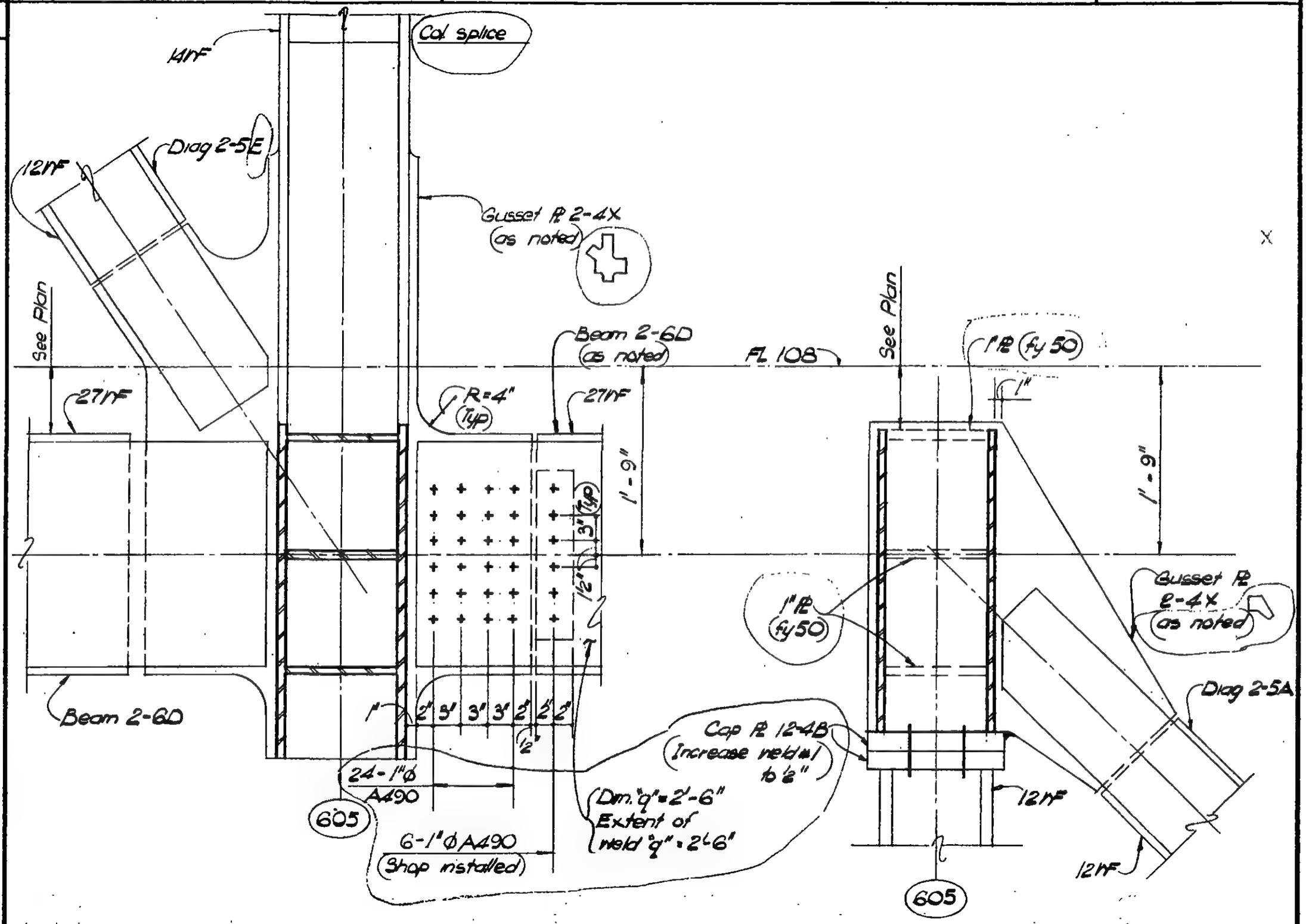

Section b2 - b2

Section b3 - b3

LICENSED PROFESSIONAL ENGINEER — LESLIE E. ROBERTSON — No. 34360 — UNIVERSITY OF THE STATE OF NEW YORK

DESIGNED

DRAWN: W. Clarke

REVIEWED: E. Drakos

9-AB18-3.15

SKILLING, HELLE, CHRISTIANSEN, ROBERTSON — Structural & Civil Engineers

PROJECT THE WORLD TRADE CENTER | TITLE FL 107 - PH CONNECTION DETAILS - LINES 04 & 05 | DATE 4-1-70

REVISIONS

7/9/70

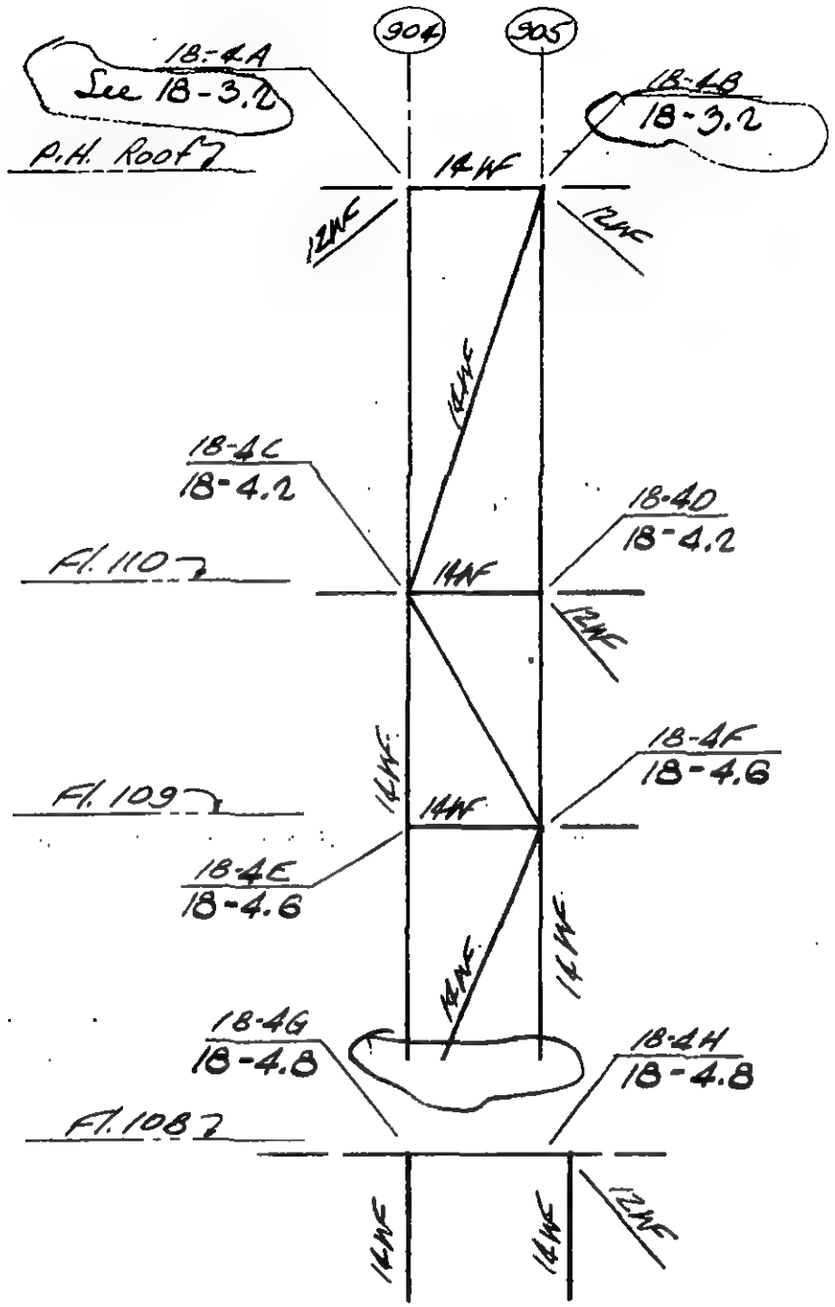

DETAIL 18-4

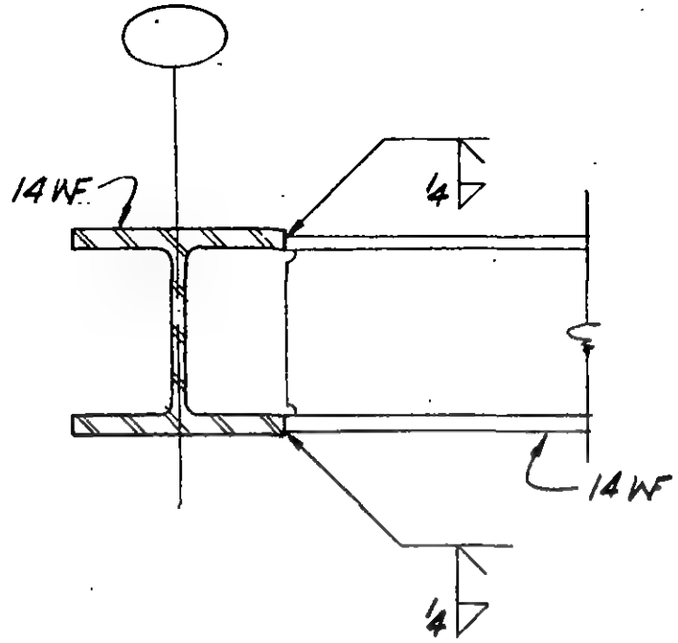

Detail ①

LICENSED PROFESSIONAL ENGINEER
LESLIE E. ROBERTSON
NO. 34360
UNIVERSITY OF THE STATE OF NEW YORK

DESIGNED

DRAWN J. Adams

REVIEWED E. Drakos

9-A&B-4.1

SKILLING, HELLE, CHRISTIANSEN, ROBERTSON — Structural & Civil Engineers

PROJECT THE WORLD TRADE CENTER | TITLE FL 107 - PH CONNECTION DETAILS - LINES 04&05 | DATE 7-9-70

REVISIONS

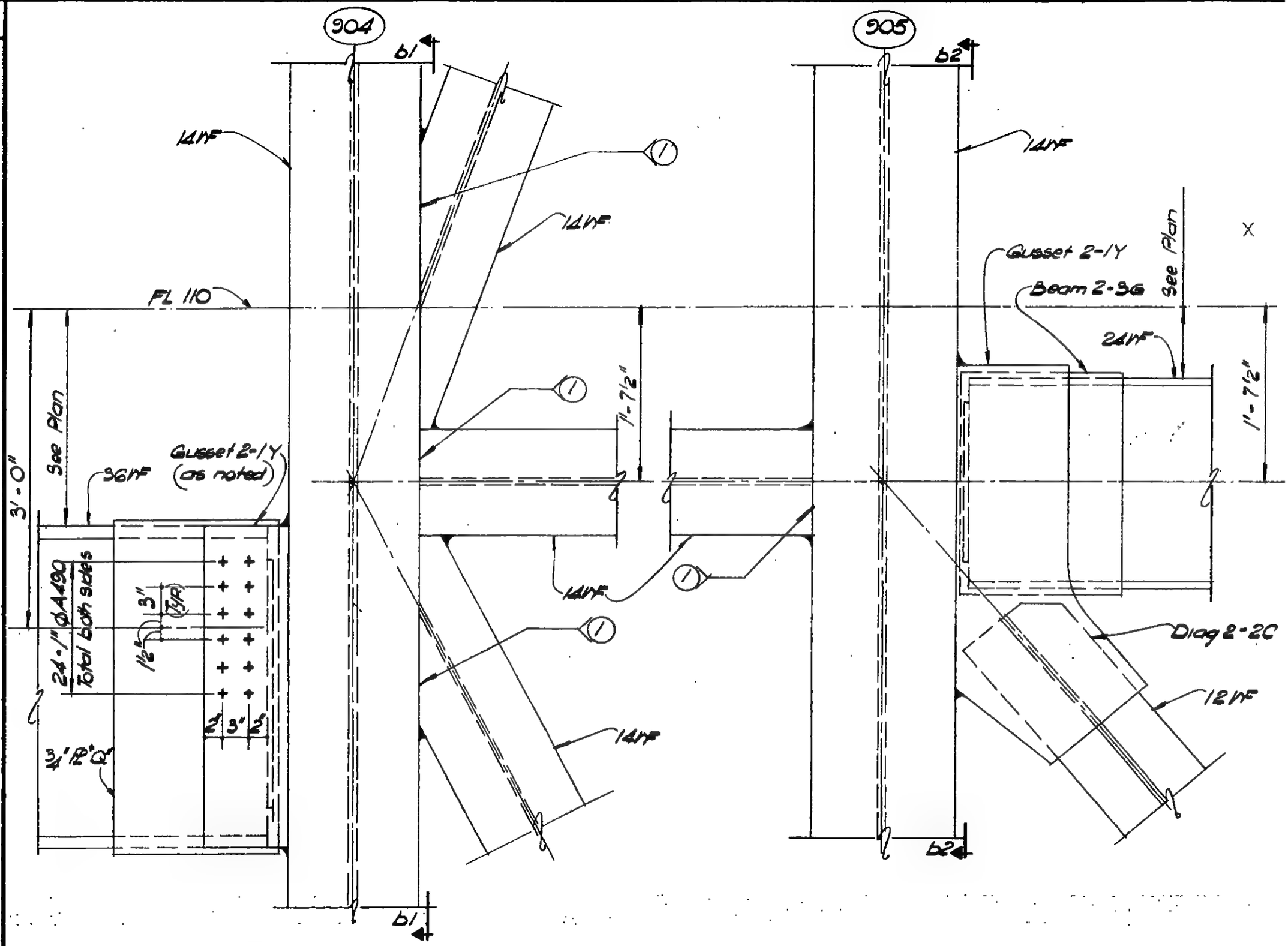

Section a-a
DETAIL 18-4C

Section a-a
DETAIL 18-4D

LICENSED PROFESSIONAL ENGINEER
LESLIE E. ROBERTSON
No. 34360
UNIVERSITY OF THE STATE OF NEW YORK

DESIGNED

DRAWN W. Clarke

REVIEWED E. Drakos

9-AB18-4.2

SKILLING, HELLE, CHRISTIANSEN, ROBERTSON — Structural & Civil Engineers

PROJECT: THE WORLD TRADE CENTER | TITLE: FL 107-PH CONNECTION DETAILS-LINES 04&05 | DATE: 7-9-70

REVISIONS

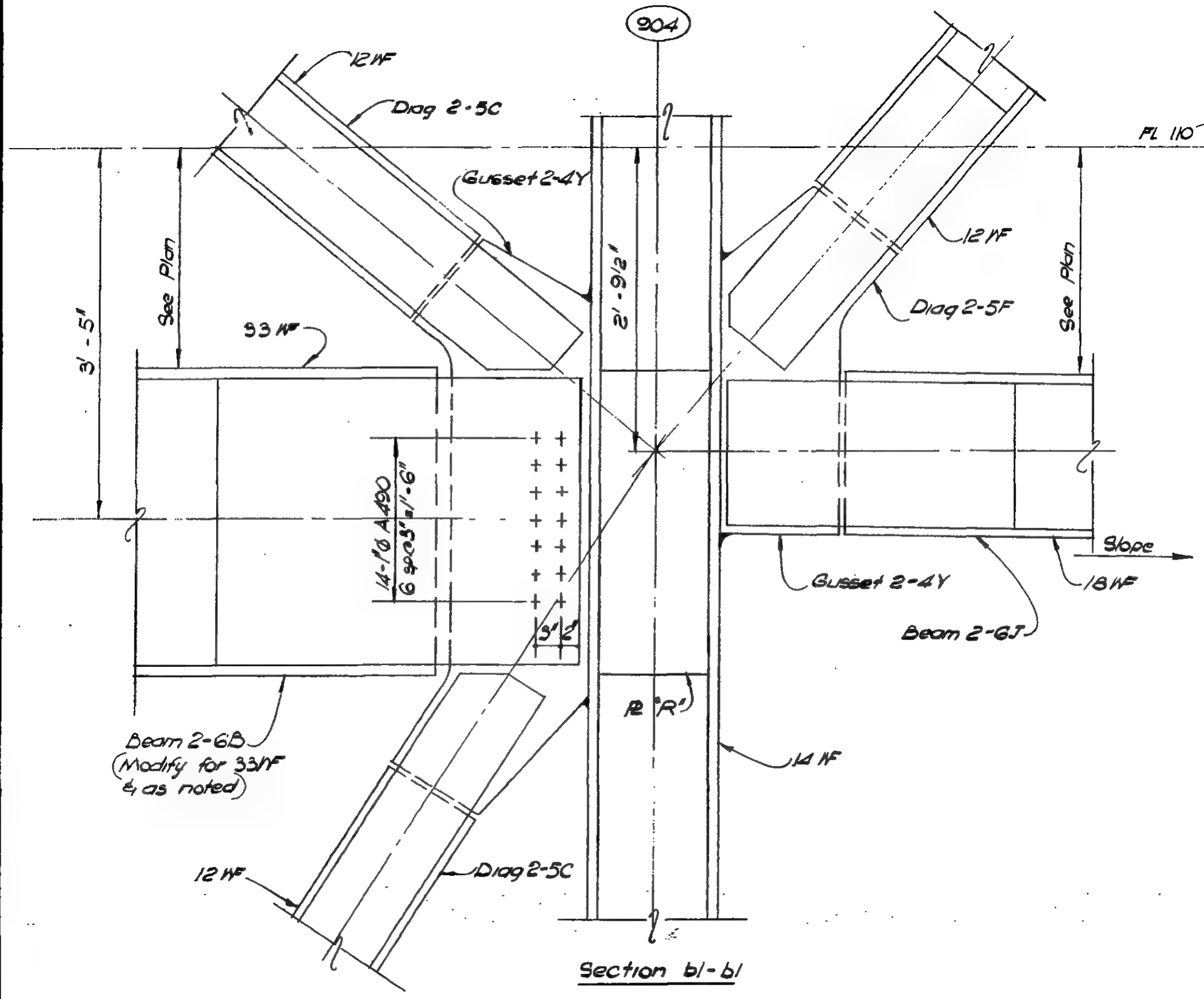

LICENSED PROFESSIONAL ENGINEER — LESLIE E. ROBERTSON — No. 34960 — UNIVERSITY OF THE STATE OF NEW YORK

DESIGNED: A. Patel

DRAWN: W. Clarke

REVIEWED: E. Dranos

9AB18-4.3

SKILLING, HELLE, CHRISTIANSEN, ROBERTSON — Structural & Civil Engineers

PROJECT THE WORLD TRADE CENTER | TITLE FL 107 - PH CONNECTION DETAILS - LINES 04&05 | DATE 7-9-70

REVISIONS

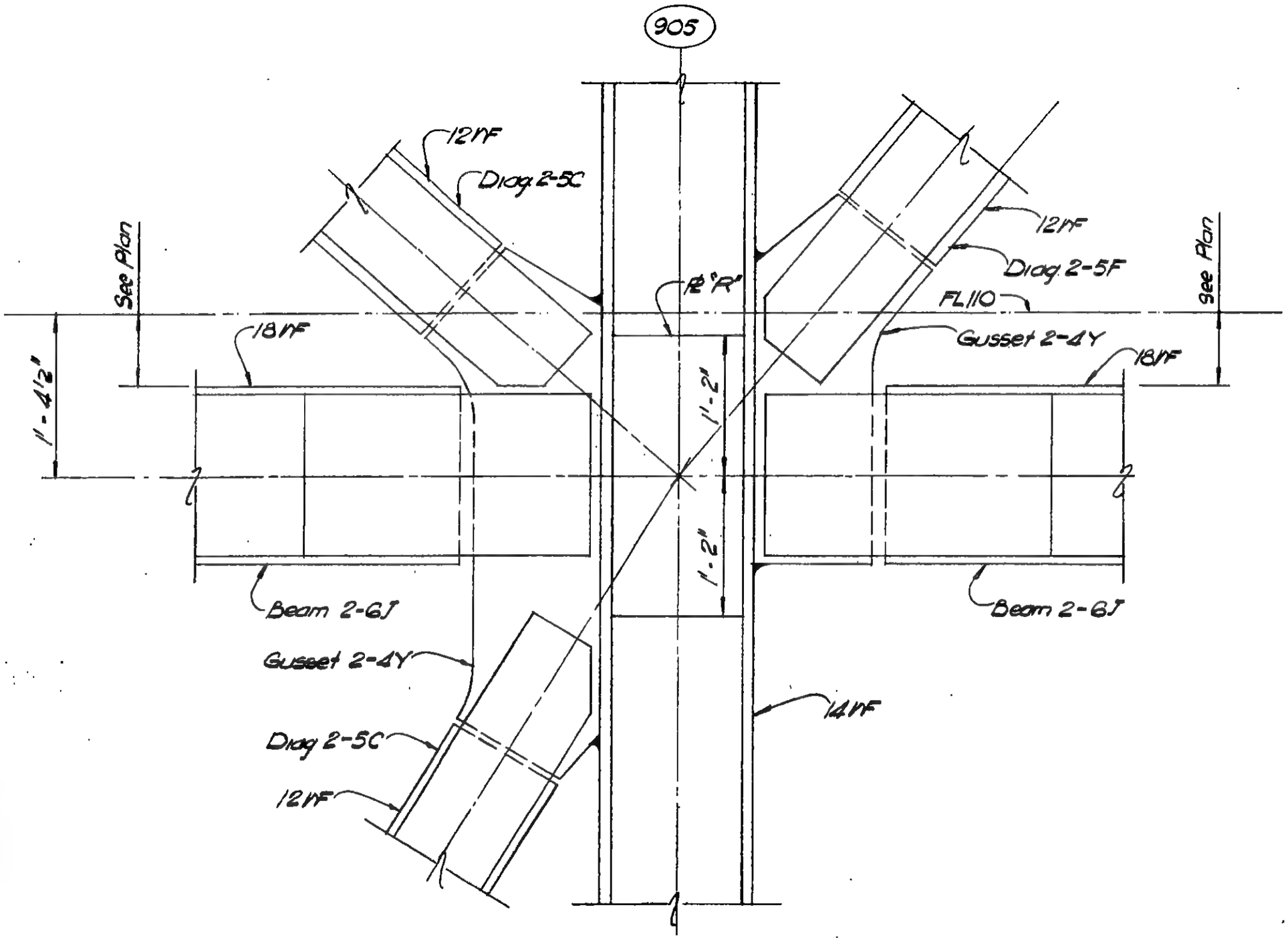

Section b2-b2

LICENSED PROFESSIONAL ENGINEER — LESLIE E. ROBERTSON — No. 34360 — UNIVERSITY OF THE STATE OF NEW YORK

DESIGNED

DRAWN W. Clarke

REVIEWED E. Drakos

9-AB18-4.4

SKILLING, HELLE, CHRISTIANSEN, ROBERTSON — Structural & Civil Engineers

PROJECT THE WORLD TRADE CENTER | TITLE FL 107 - PH CONNECTION DETAILS - LINES 04 & 05 | DATE 7-8-70

REVISIONS

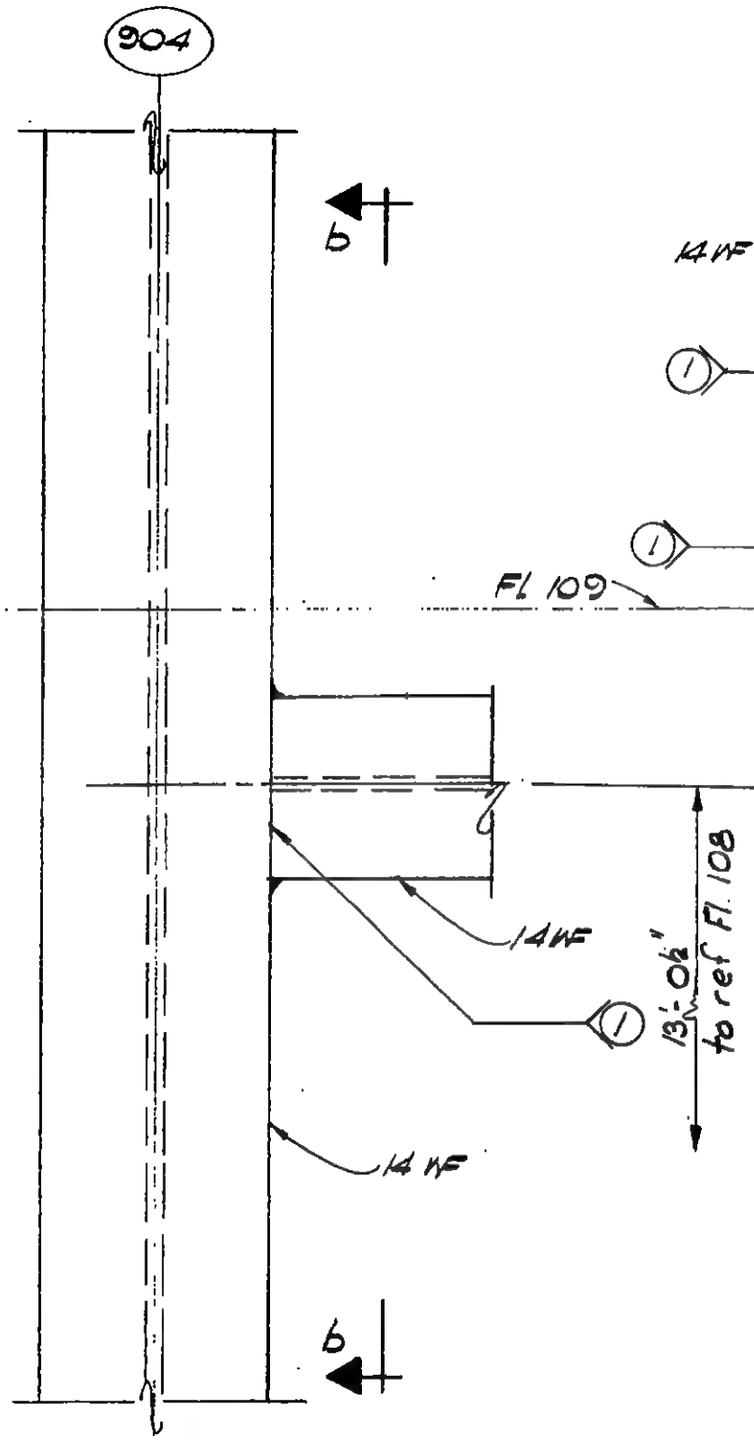

Section a-a
DETAIL 18-4E

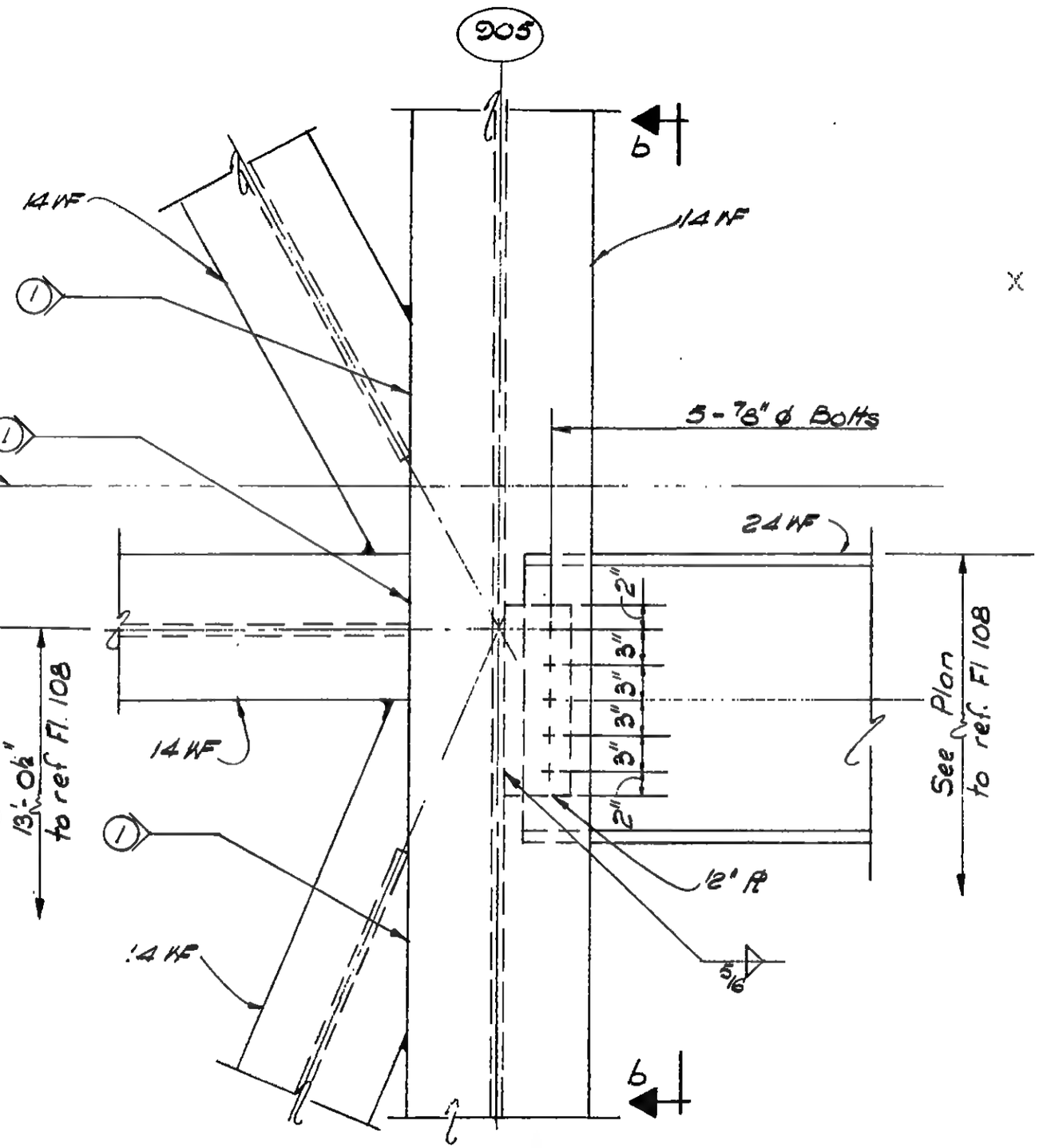

Section a-a
DETAIL 18-4F

LICENSED PROFESSIONAL ENGINEER
LESLIE E. ROBERTSON
No. 34360
UNIVERSITY OF THE STATE OF NEW YORK

DESIGNED A. Patel
DRAWN W. Clarke
REVIEWED E. Drakos

9-AB18-4.6

SKILLING, HELLE, CHRISTIANSEN, ROBERTSON — Structural & Civil Engineers

PROJECT THE WORLD TRADE CENTER | TITLE FL 107 - PH CONNECTION DETAILS - LINES 04 & 05 | DATE 7-8-70

REVISIONS

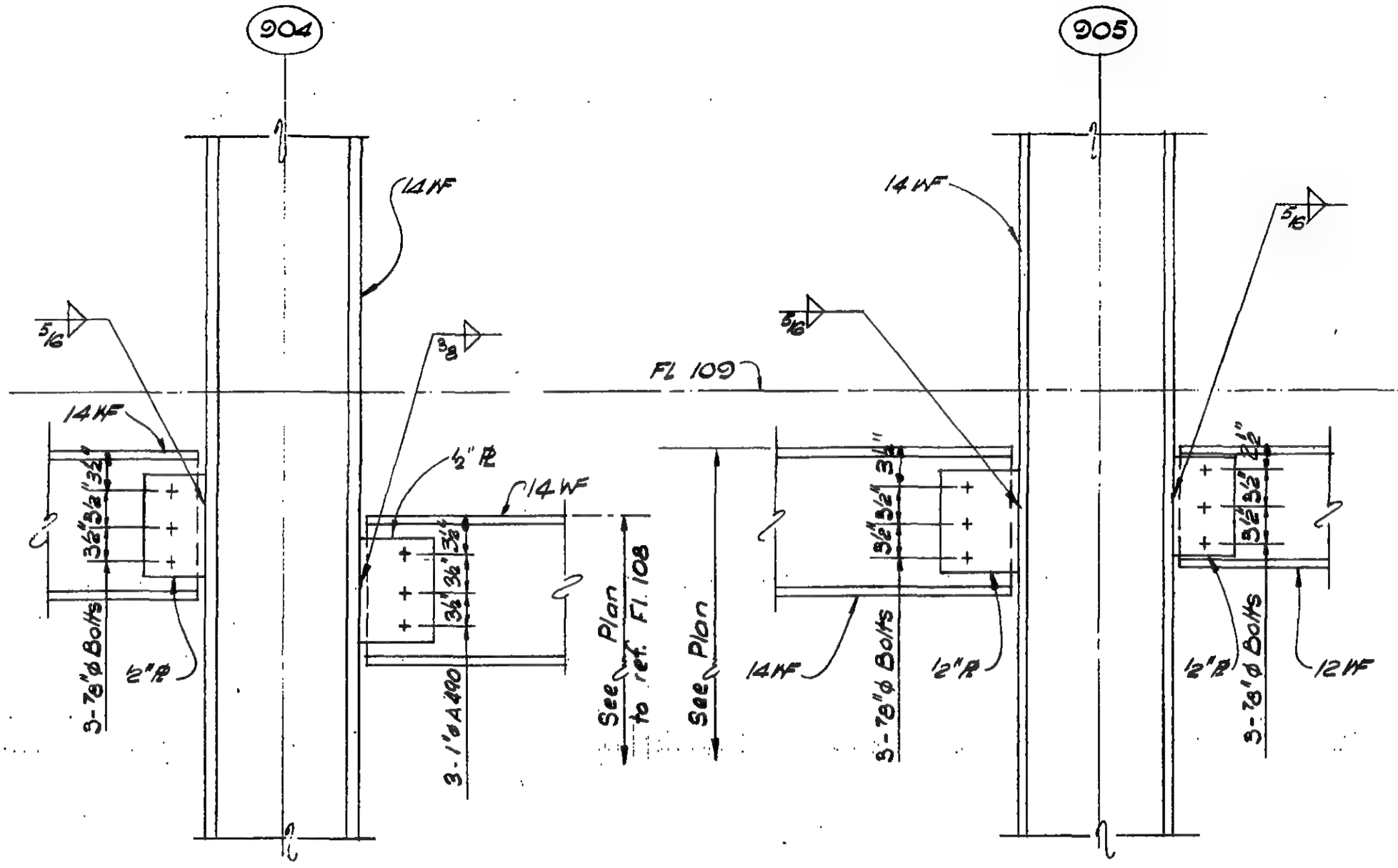

Section b-b

LICENSED PROFESSIONAL ENGINEER — LESLIE E. ROBERTSON — No. 34360 — UNIVERSITY OF THE STATE OF NEW YORK

DESIGNED A. Patel

DRAWN M. Clarke

REVIEWED E. Dracos

9-AB 18-4.7

SKILLING, HELLE, CHRISTIANSEN, ROBERTSON — Structural & Civil Engineers

PROJECT: THE WORLD TRADE CENTER | TITLE: FL 107 - PH CONNECTION DETAILS - LINES 04 & 05 | DATE: 6-22-70

REVISIONS

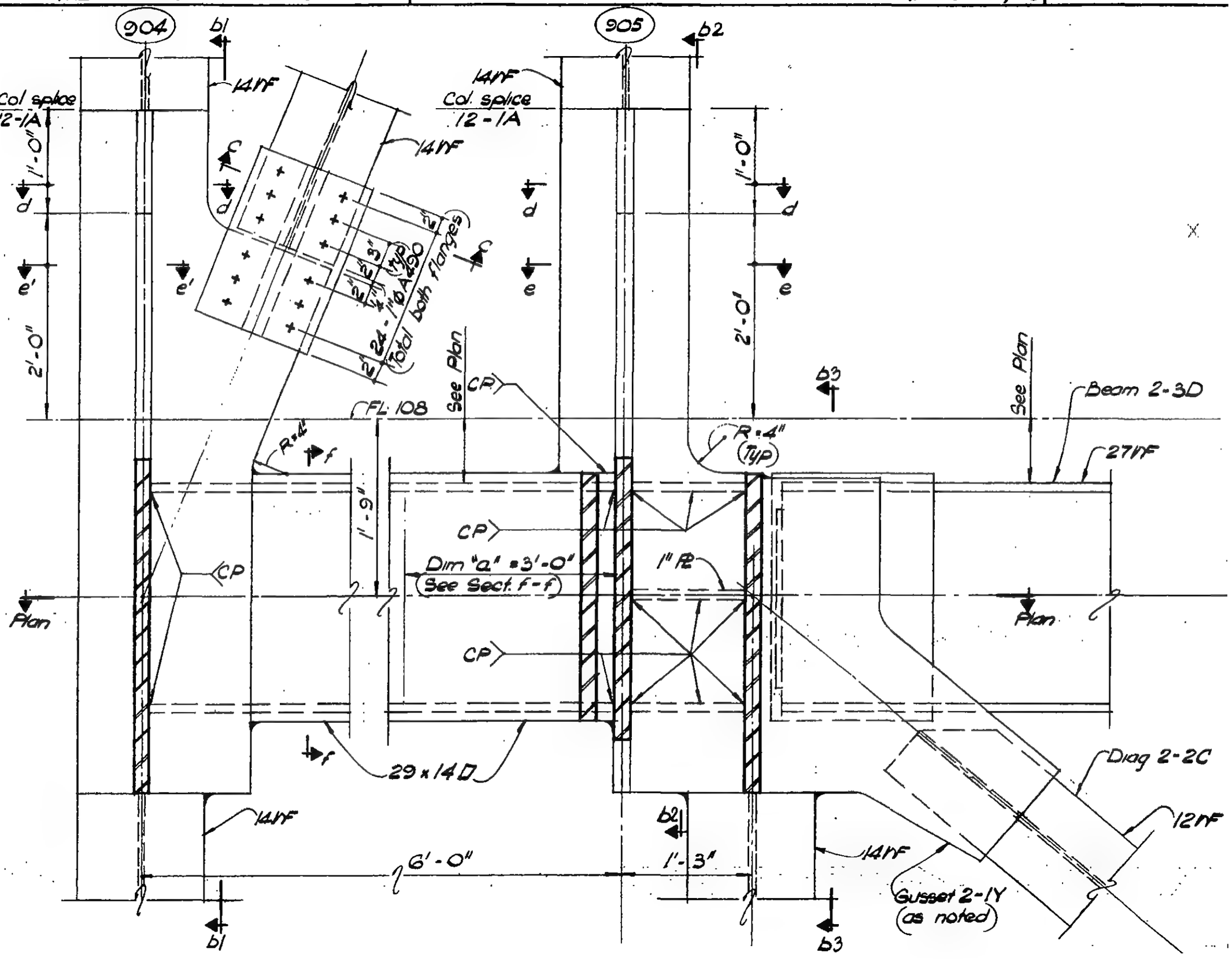

Section a-a
DETAIL 18-4G

Section a-a
DETAIL 18-4H

9-AB18-4.8

LICENSED PROFESSIONAL ENGINEER — LESLIE E. ROBERTSON — No. 34360 — UNIVERSITY OF THE STATE OF NEW YORK

DESIGNED

DRAWN: W. Clarke

REVIEWED: E. Drakos

SKILLING, HELLE, CHRISTIANSEN, ROBERTSON — Structural & Civil Engineers

PROJECT THE WORLD TRADE CENTER | TITLE FL 107 - PH CONNECTION DETAILS - LINES 04&05 | DATE 6-22-70

REVISIONS

7-15-70

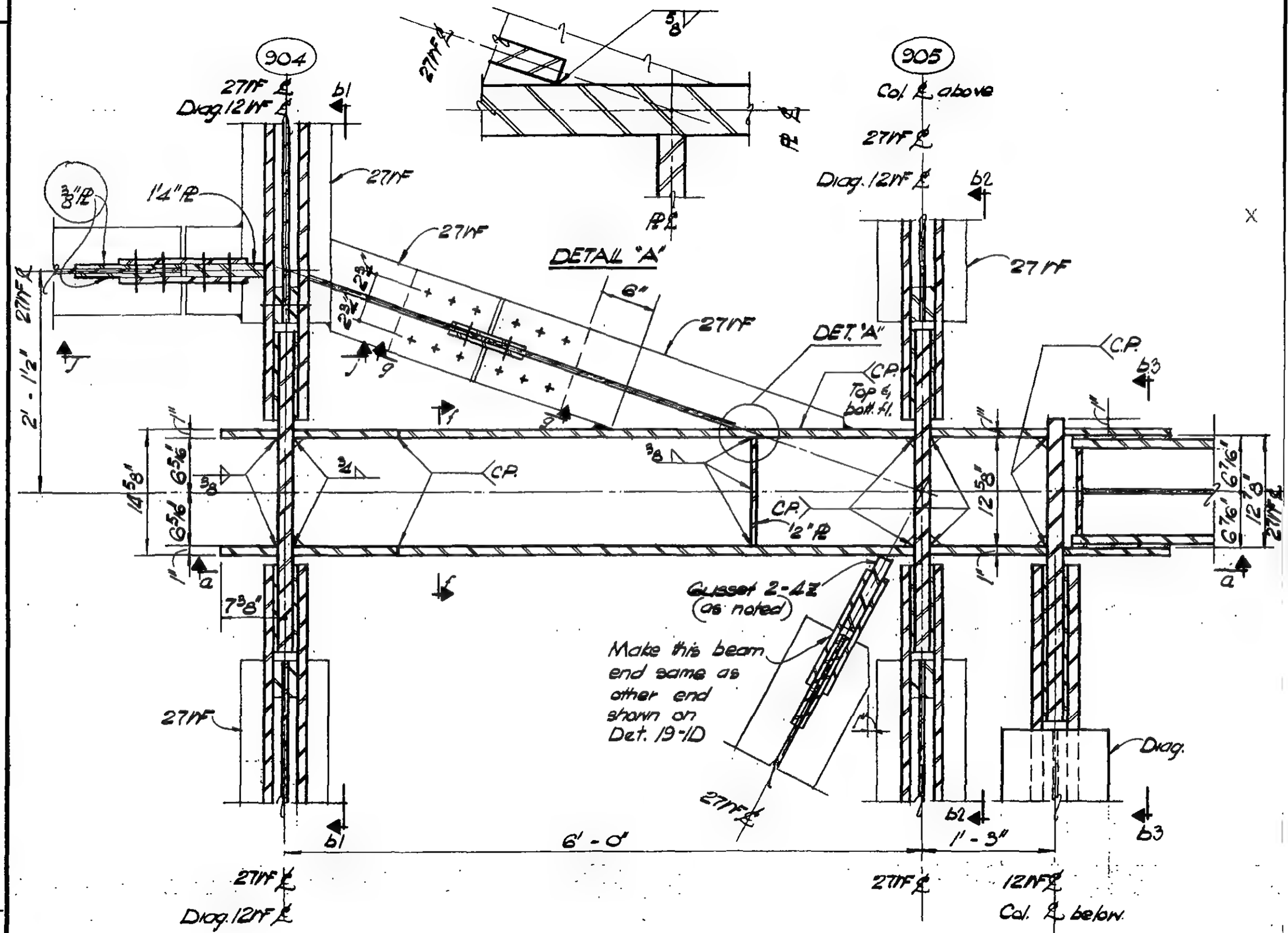

LICENSED PROFESSIONAL ENGINEER — LESLIE E. ROBERTSON — No. 34360 — UNIVERSITY OF THE STATE OF NEW YORK

DESIGNED

DRAWN W. Clarke

REVIEWED E. Drakos

9-AB18-4.9

SKILLING, HELLE, CHRISTIANSEN, ROBERTSON — Structural & Civil Engineers

PROJECT: THE WORLD TRADE CENTER | TITLE: FL 107-PH CONNECTION DETAILS - LINES 04 & 05 | DATE: 6-22-70

REVISIONS

7-15-70

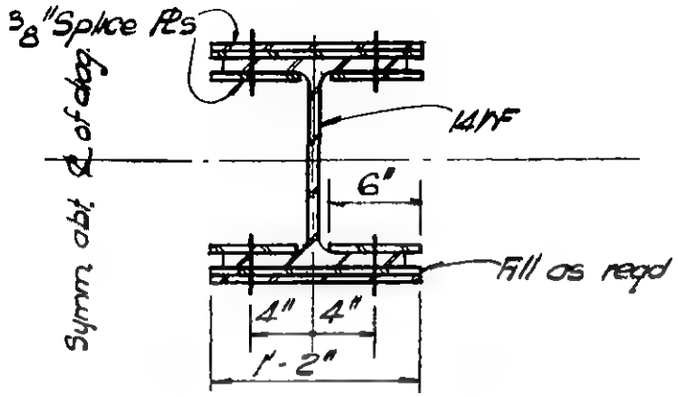

Section c-c

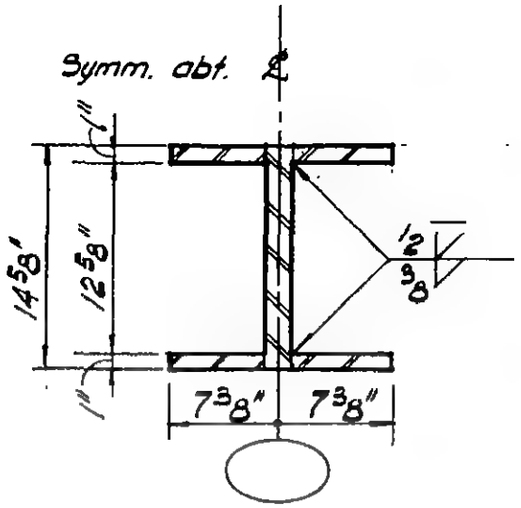

Section d-d

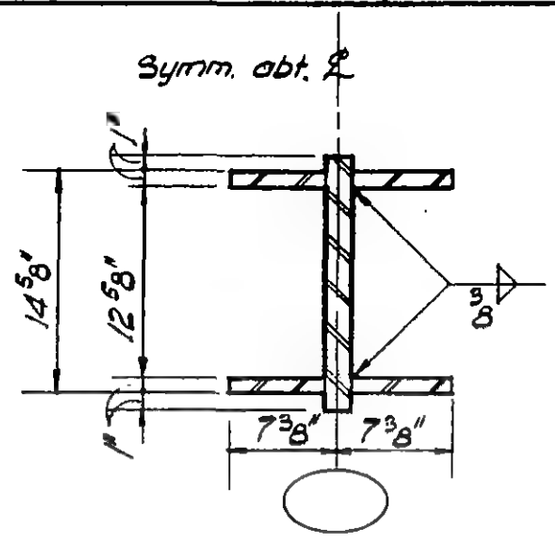

Section e-e (as shown)
Section e'-e' (similar)

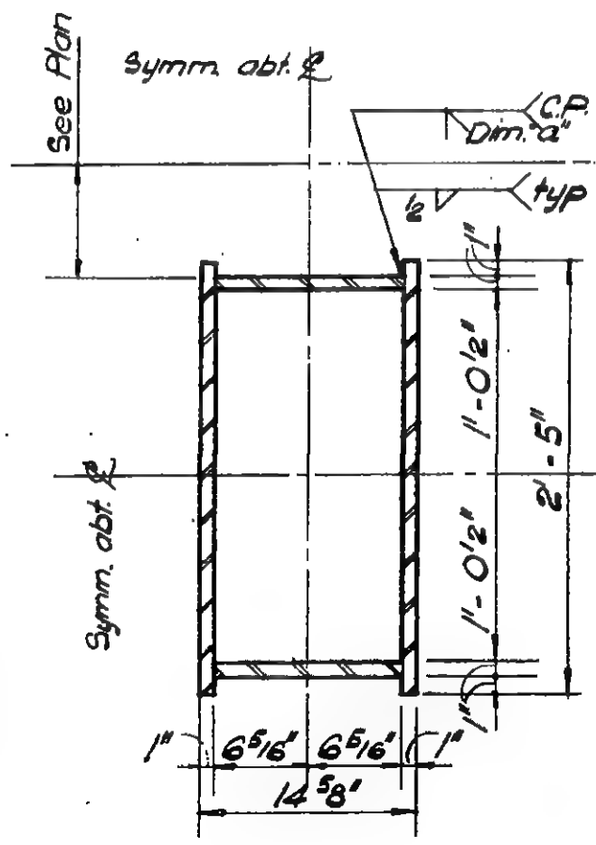

Section f-f
(29 x 14 D)

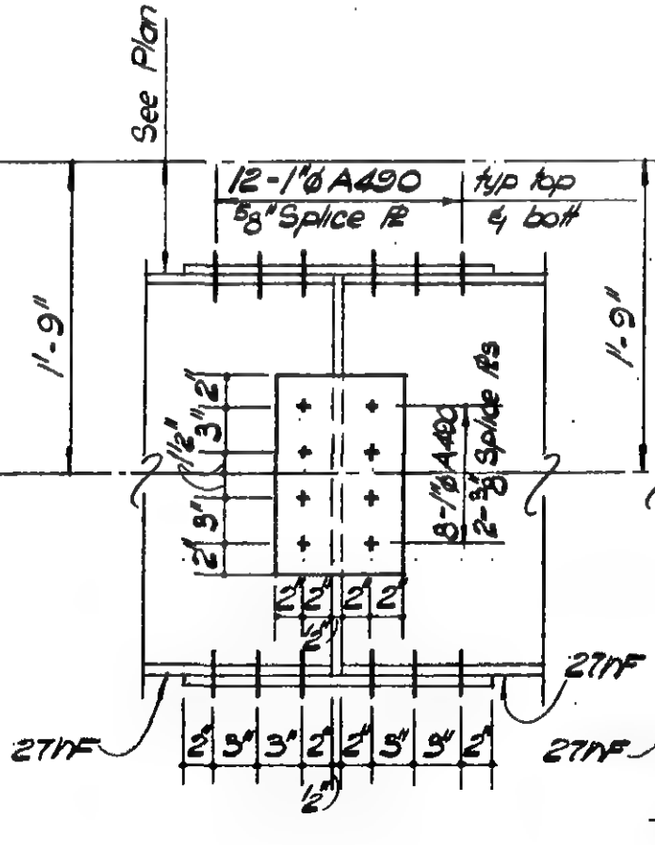

Section g-g

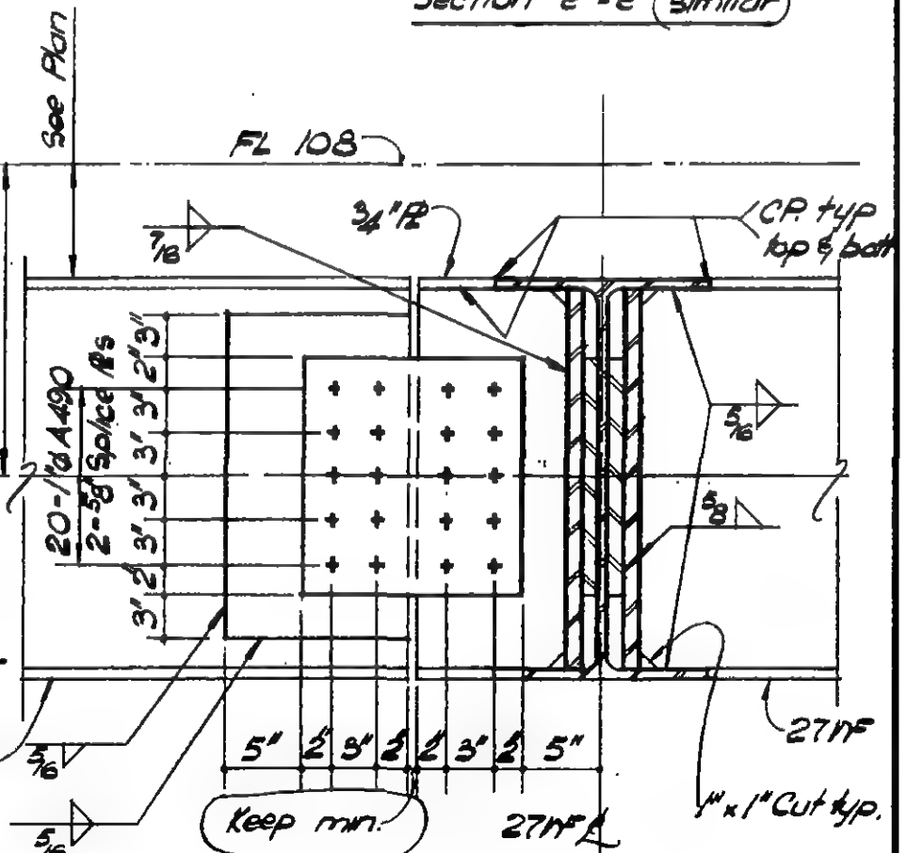

Section j-j

LICENSED PROFESSIONAL ENGINEER — LESLIE E. ROBERTSON — No. 34360 — UNIVERSITY OF THE STATE OF NEW YORK

DESIGNED

DRAWN: W. Clarke

REVIEWED: E. Oraikos

9-AB18-4.10

SKILLING, HELLE, CHRISTIANSEN, ROBERTSON — Structural & Civil Engineers

PROJECT THE WORLD TRADE CENTER | TITLE FL 107 - PH CONNECTION DETAILS - LINES 04 & 05 | DATE 7-8-70

REVISIONS

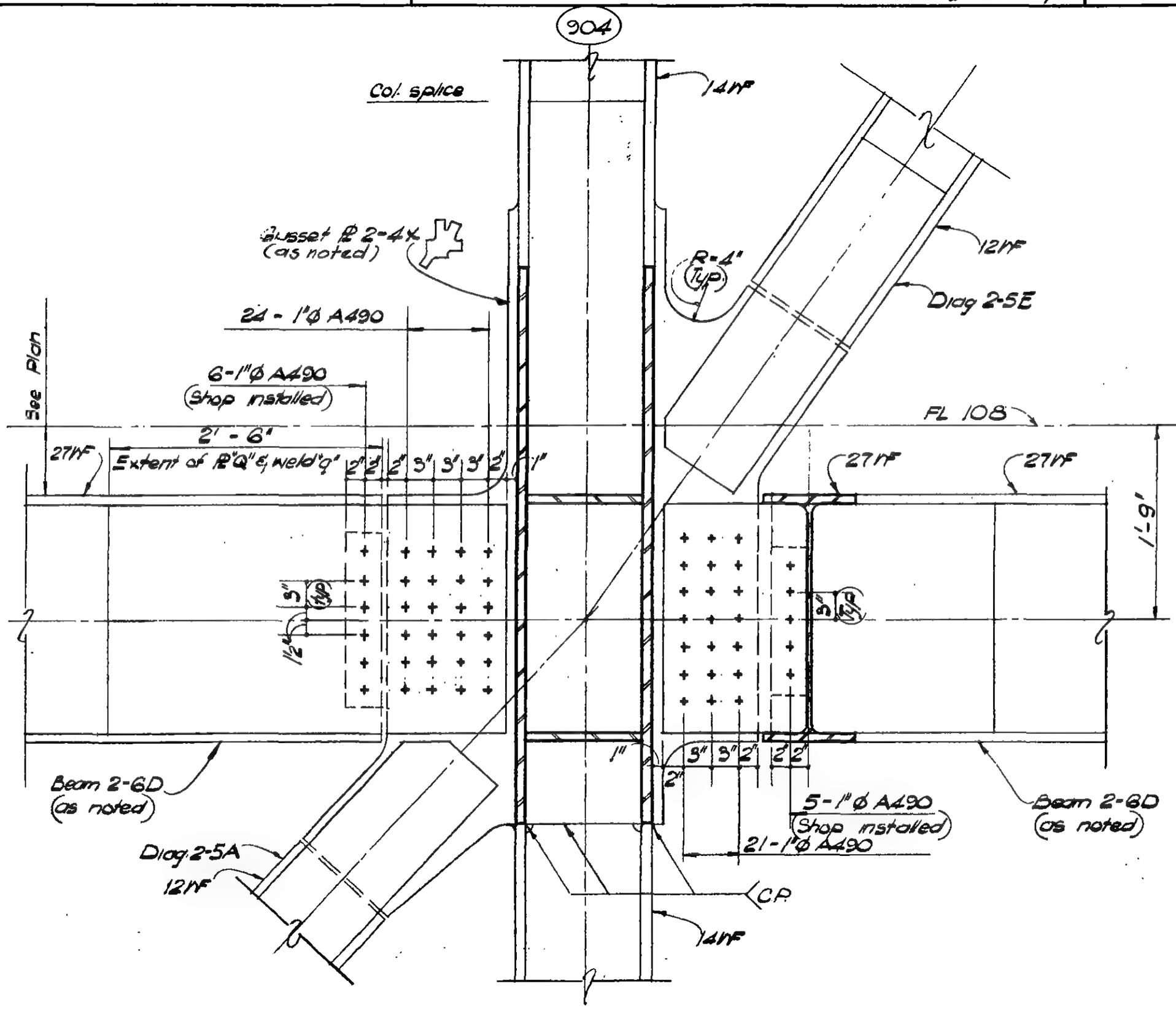

Section b1-b1

LICENSED PROFESSIONAL ENGINEER — LESLIE E. ROBERTSON — No. 34360 — UNIVERSITY OF THE STATE OF NEW YORK

DESIGNED

DRAWN W. Clarke

REVIEWED E. Drakos

9-AB18-4.11

SKILLING, HELLE, CHRISTIANSEN, ROBERTSON — Structural & Civil Engineers

PROJECT THE WORLD TRADE CENTER | TITLE FL 107 - PH CONNECTION DETAILS - LINES 04 & 05 | DATE 7-8-70

REVISIONS

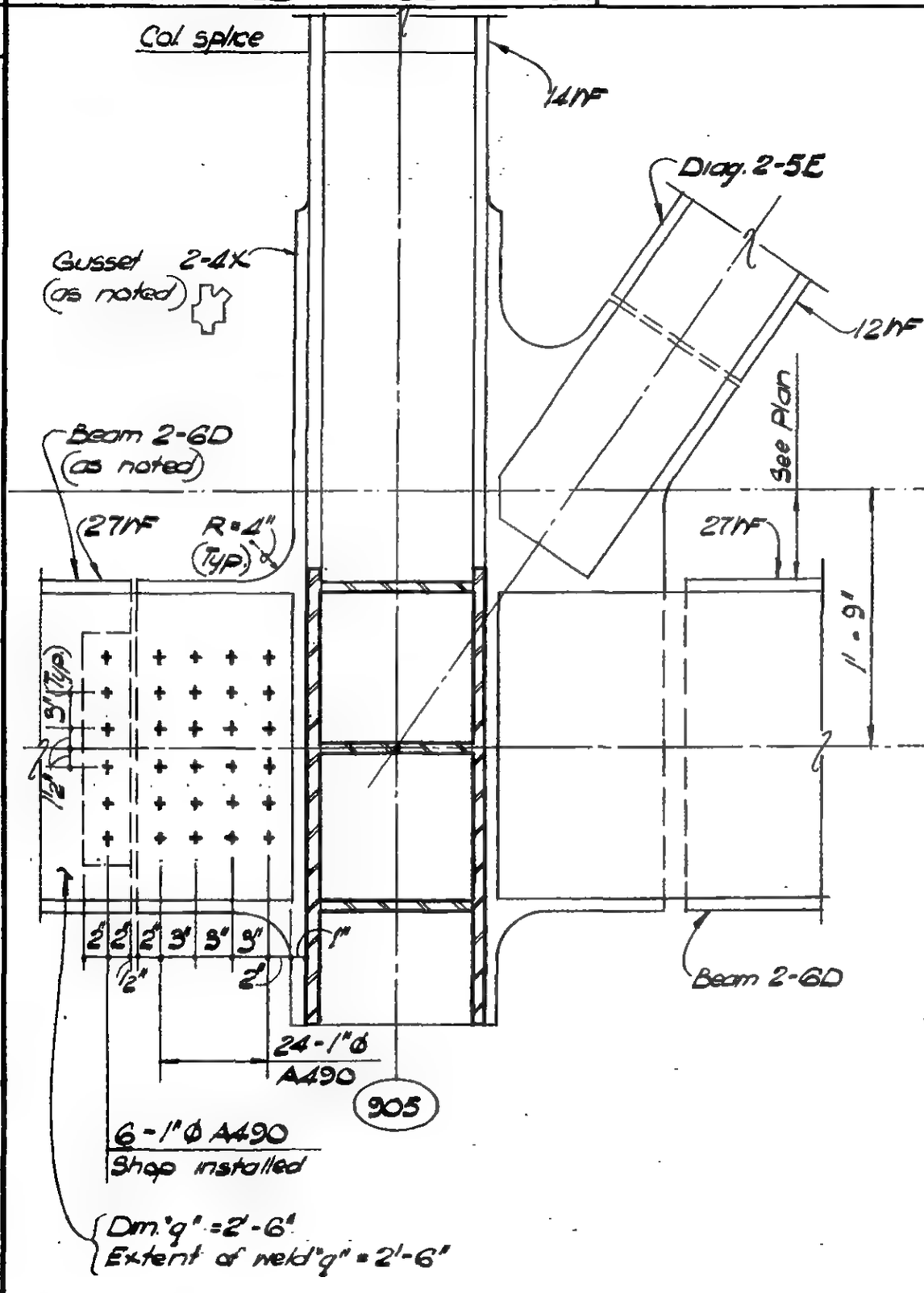

Section b2-b2

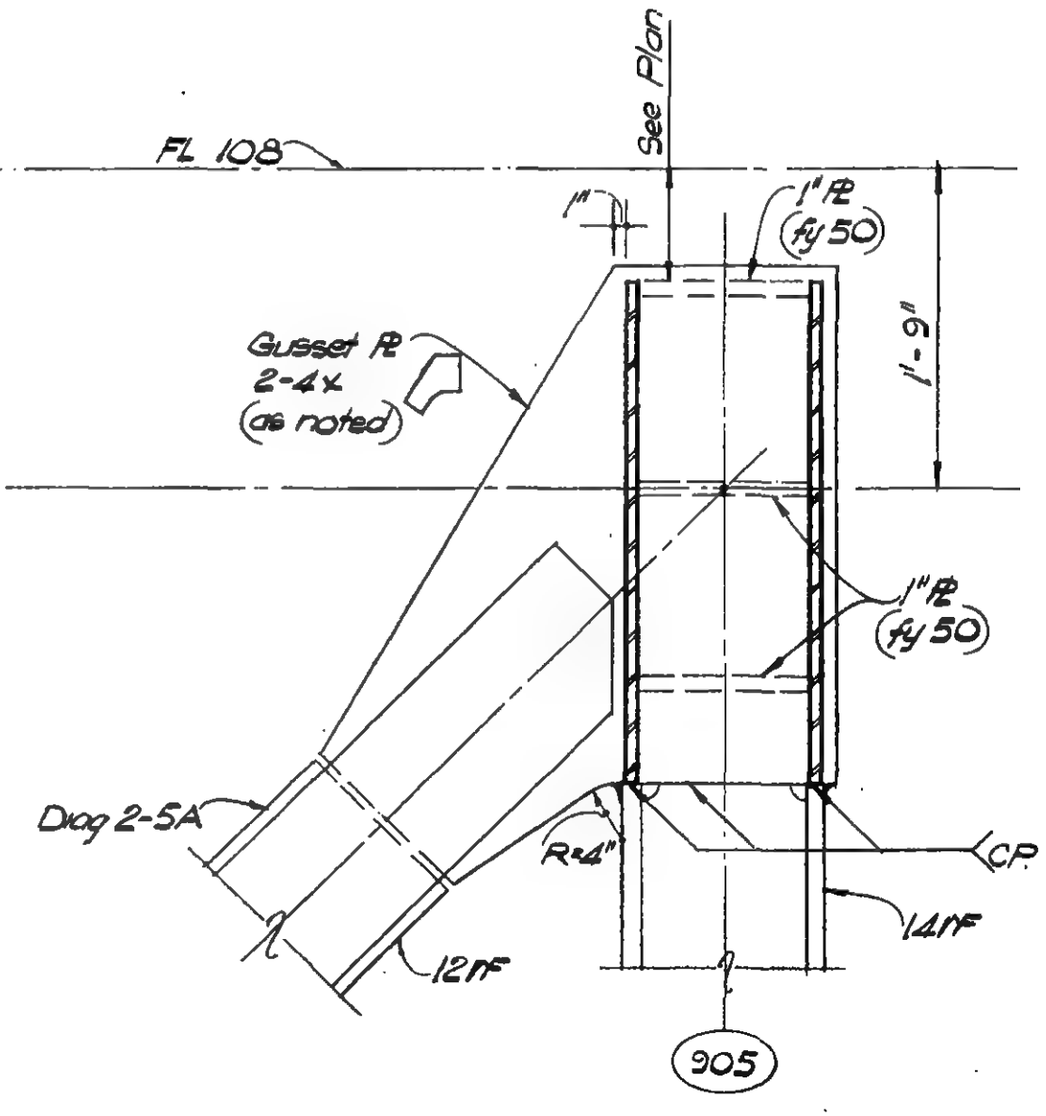

Section b3-b3

LICENSED PROFESSIONAL ENGINEER — LESLIE E. ROBERTSON — No. 34360 — UNIVERSITY OF THE STATE OF NEW YORK

DESIGNED

DRAWN M. Clarke

REVIEWED E. Drakos

9-AB18-4.12

SKILLING, HELLE, CHRISTIANSEN, ROBERTSON — Structural & Civil Engineers

PROJECT: THE WORLD TRADE CENTER | TITLE: FL. 107-PH CONNECTION DETAILS-LINES 04405 | DATE: 4-1-70

REVISIONS

7-10-70
12/14/70

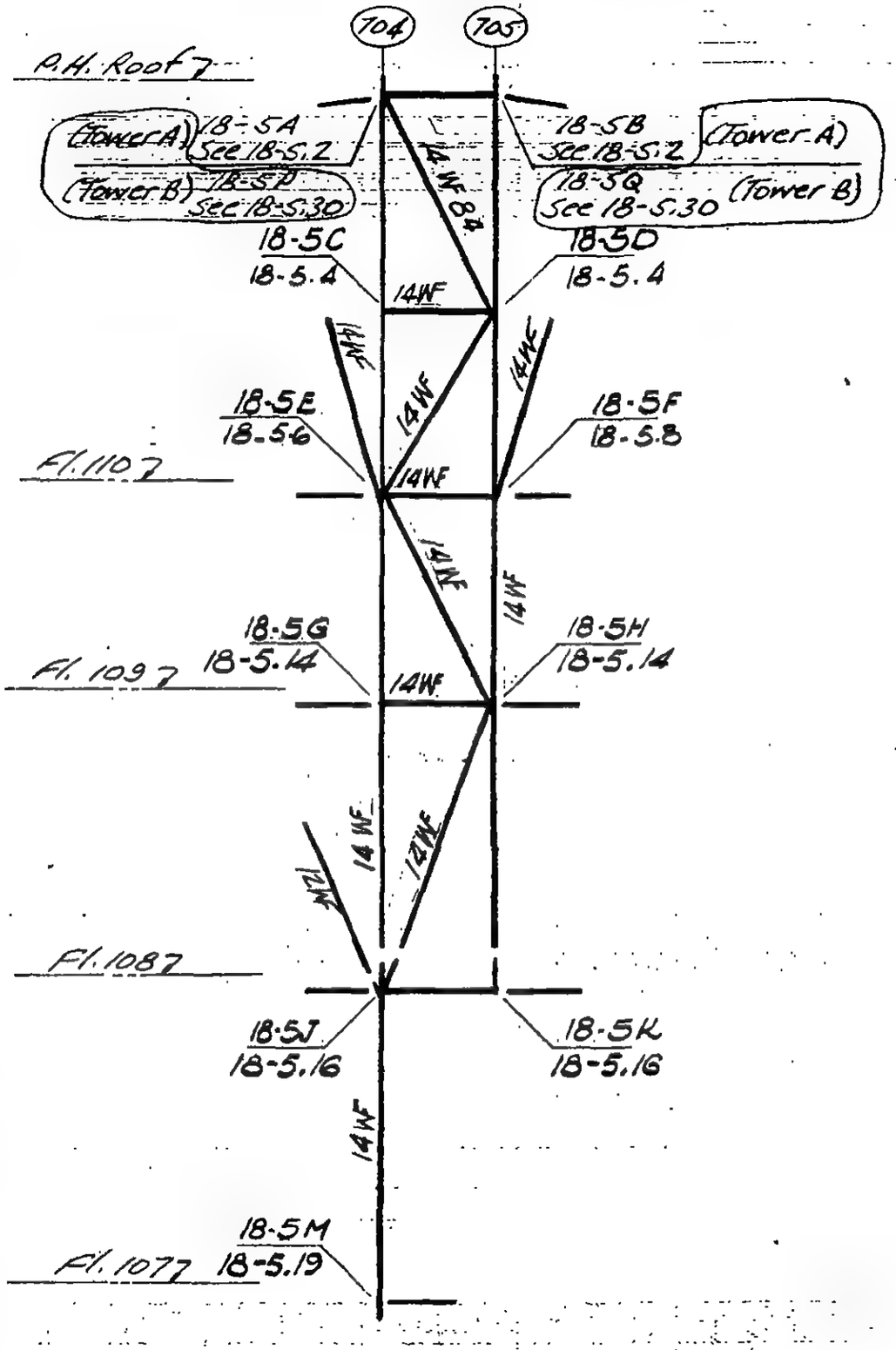

DETAIL 18-5

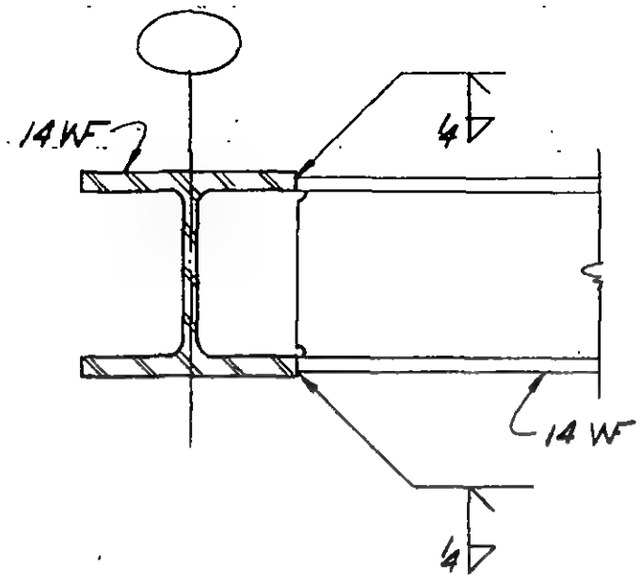

Detail (1)

LICENSED PROFESSIONAL ENGINEER — LESLIE E. ROBERTSON — No. 34360 — UNIVERSITY OF THE STATE OF NEW YORK

DESIGNED

DRAWN M. Nichols

REVIEWED

9-AB/8-5

SKILLING, HELLE, CHRISTIANSEN, ROBERTSON — Structural & Civil Engineers

PROJECT: THE WORLD TRADE CENTER | TITLE: FL 107 PH CONNECTION DETAILS LINES 004 & 005 | DATE: 4-1-70

REVISIONS

7-10-70
10-12-70

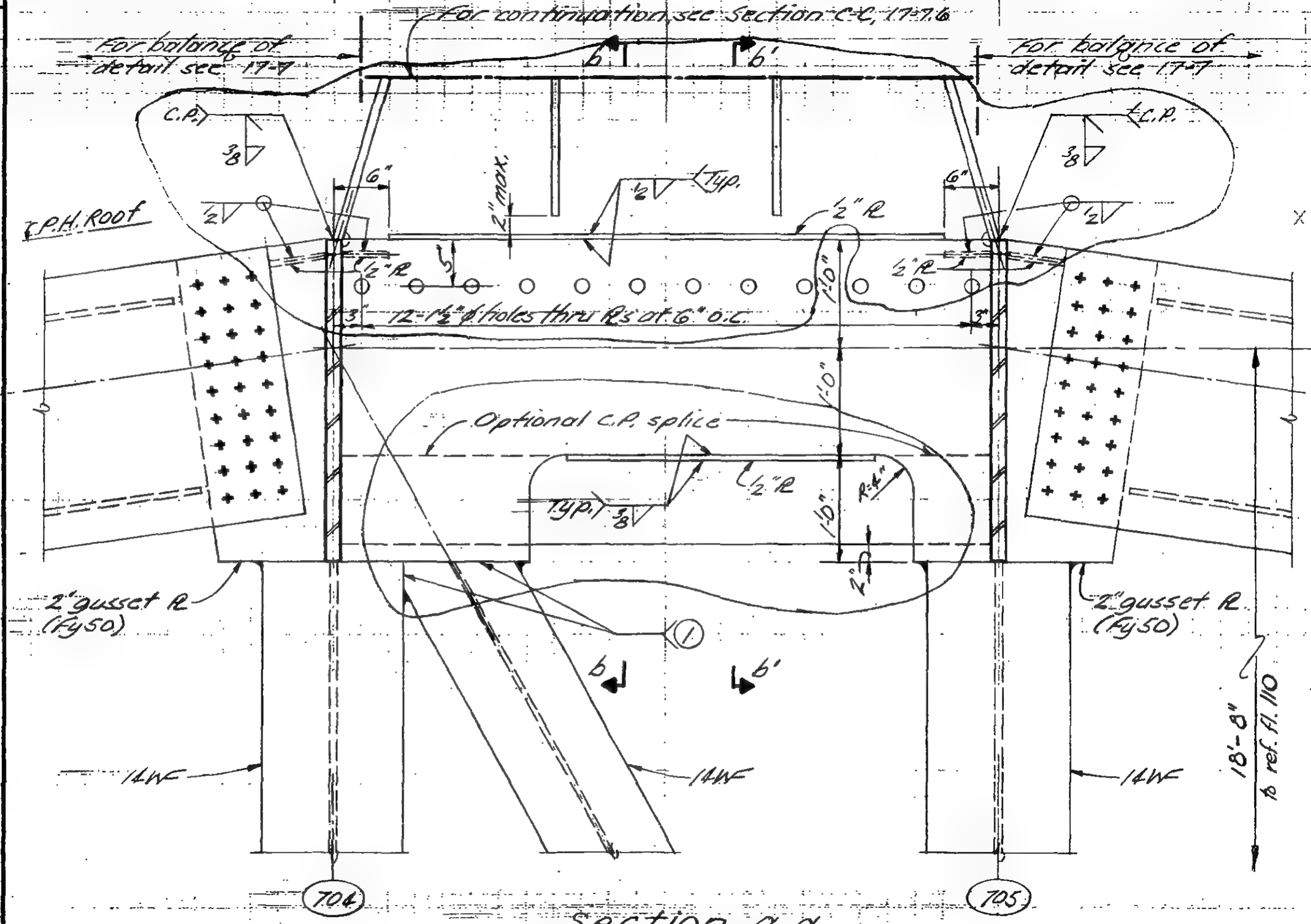

Section a-a

Detail 18-5A

Detail 18-5B

LICENSED PROFESSIONAL ENGINEER — LESLIE E. ROBERTSON — NO 34360 — UNIVERSITY OF THE STATE OF NEW YORK

DESIGNED

DRAWN J. Adams

REVIEWED

9-A 18-5.2

SKILLING, HELLE, CHRISTIANSEN, ROBERTSON — Structural & Civil Engineers

PROJECT THE WORLD TRADE CENTER | TITLE FL 107 - PH CONNECTION DETAILS - LINES 004 & 005 | DATE 4 - 1 - 70

REVISIONS

7-10-70.
10-12-70

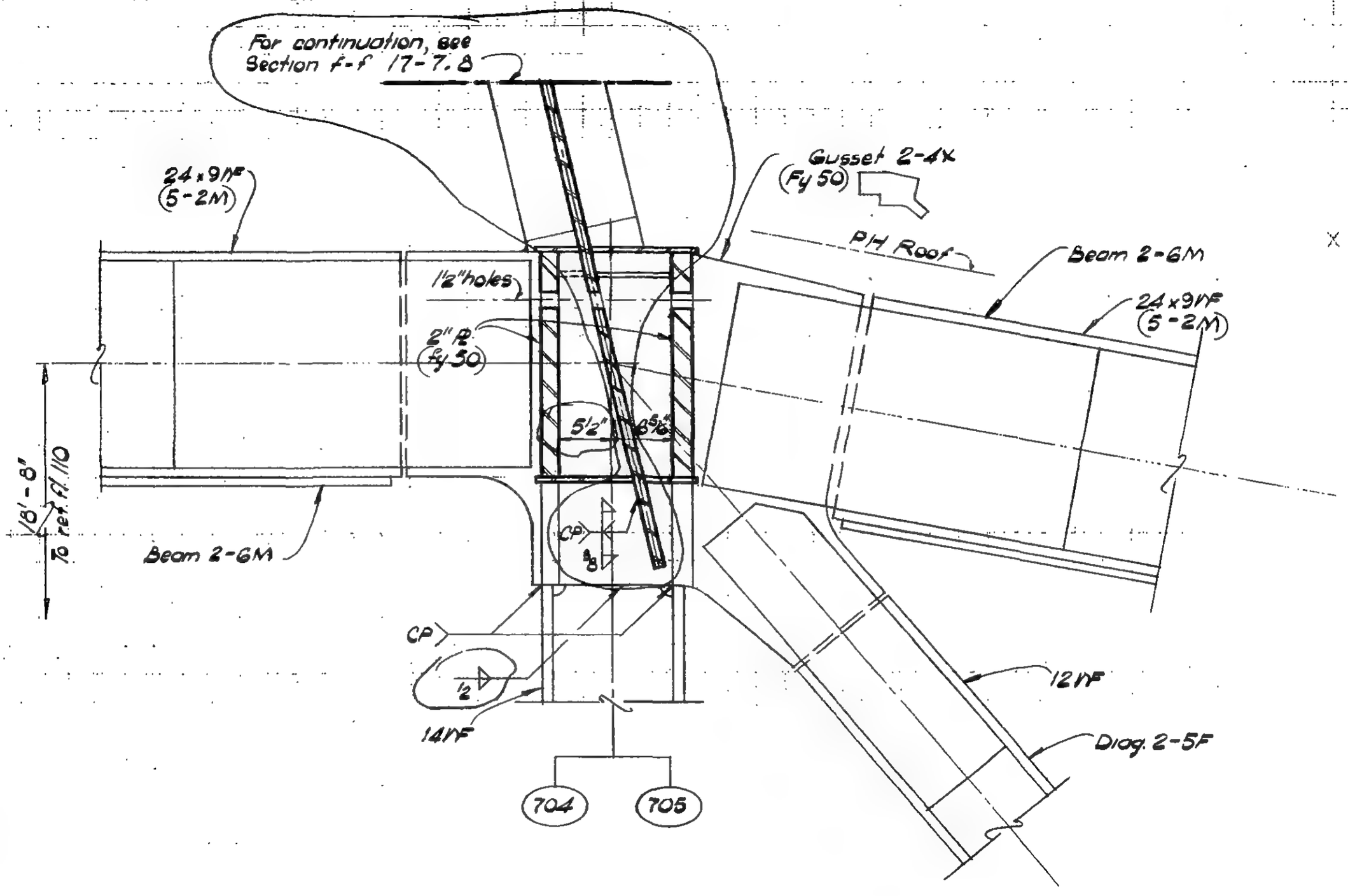

Section b - b (as shown)
Section b' - b' (opp hand)

LICENSED PROFESSIONAL ENGINEER — LESLIE E. ROBERTSON — No 34360 — UNIVERSITY OF THE STATE OF NEW YORK

DESIGNED

DRAWN W. Clarke

REVIEWED

9-A 18-5.3

SKILLING, HELLE, CHRISTIANSEN, ROBERTSON — Structural & Civil Engineers

PROJECT THE WORLD TRADE CENTER | TITLE EL 107 - PH CONNECTION DETAILS - LINE 04 & 05 | DATE 4-1-70

REVISIONS

7-10-70

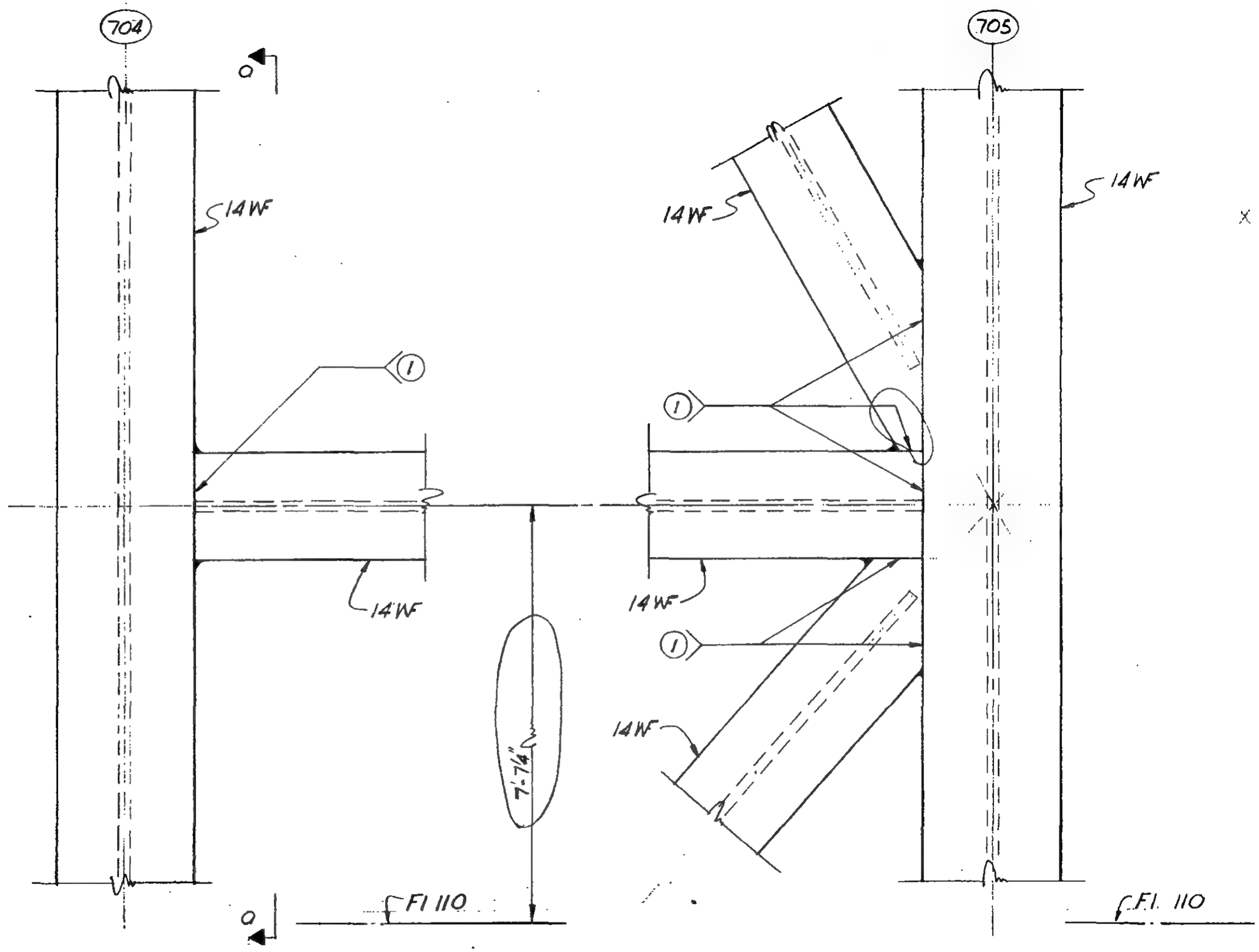

Detail 18-5C

Detail 18-5D

DESIGNED

DRAWN T. Terrelonge

REVIEWED

9-AB18-5.4

SKILLING, HELLE, CHRISTIANSEN, ROBERTSON — Structural & Civil Engineers

PROJECT: THE WORLD TRADE CENTER | TITLE: FLOOR 107-PH CONNECTION DETAILS-LINES 04 & 05 | DATE: 4-1-70

REVISIONS

7-10-70

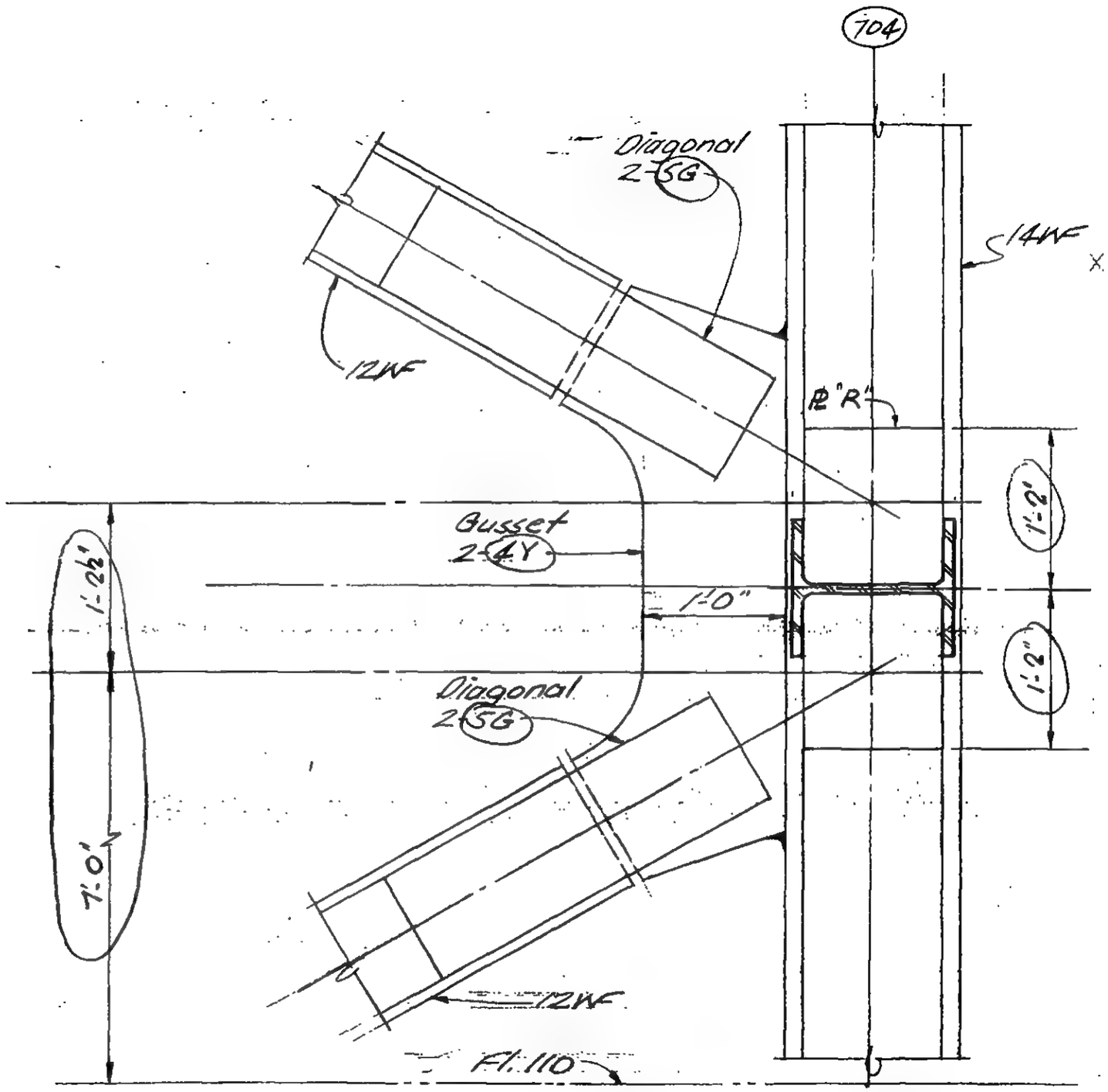

Section a-a

LICENSED PROFESSIONAL ENGINEER
LESLIE E. ROBERTSON
No. 34360
UNIVERSITY OF THE STATE OF NEW YORK

22

DESIGNED

DRAWN

J. Adams

REVIEWED

9-A878-55

SKILLING, HELLE, CHRISTIANSEN, ROBERTSON — Structural & Civil Engineers

PROJECT THE WORLD TRADE CENTER | TITLE FL 110 - PH CONNECTION DETAILS - LINES 04 & 05 | DATE 4-1-70

REVISIONS

7-10-70

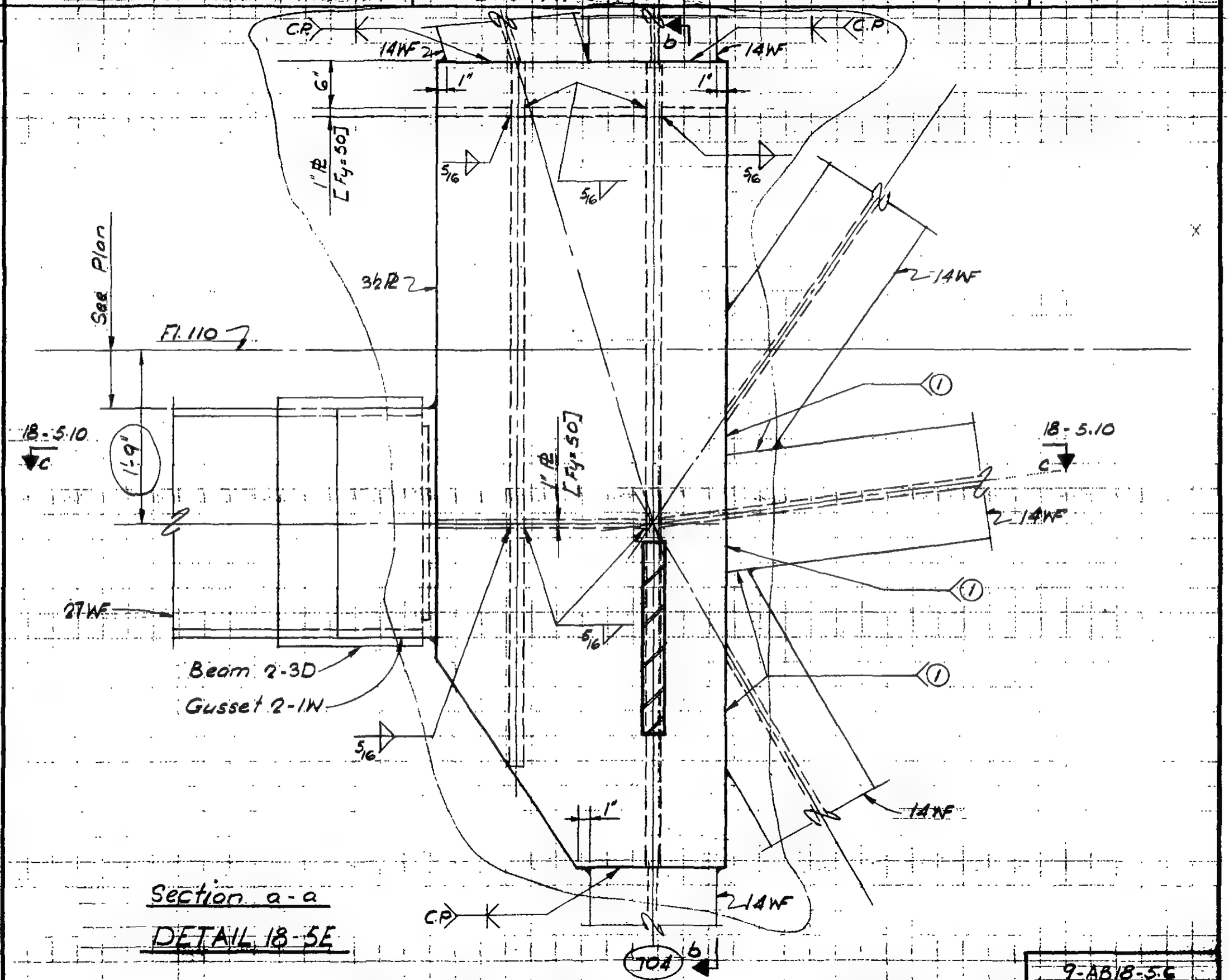

Section a-a

DETAIL 18-5E

LICENSED PROFESSIONAL ENGINEER — LESLIE E. ROBERTSON — No. 34360 — UNIVERSITY OF THE STATE OF NEW YORK

23

DESIGNED

DRAWN T. Torrelonge

REVIEWED

9-AB18-5.6

SKILLING, HELLE, CHRISTIANSEN, ROBERTSON — Structural & Civil Engineers

PROJECT THE WORLD TRADE CENTER | TITLE EL 110 - PH CONNECTION DETAILS - LINES 04 & 05 | DATE 4-1-70

REVISIONS

7-10-70

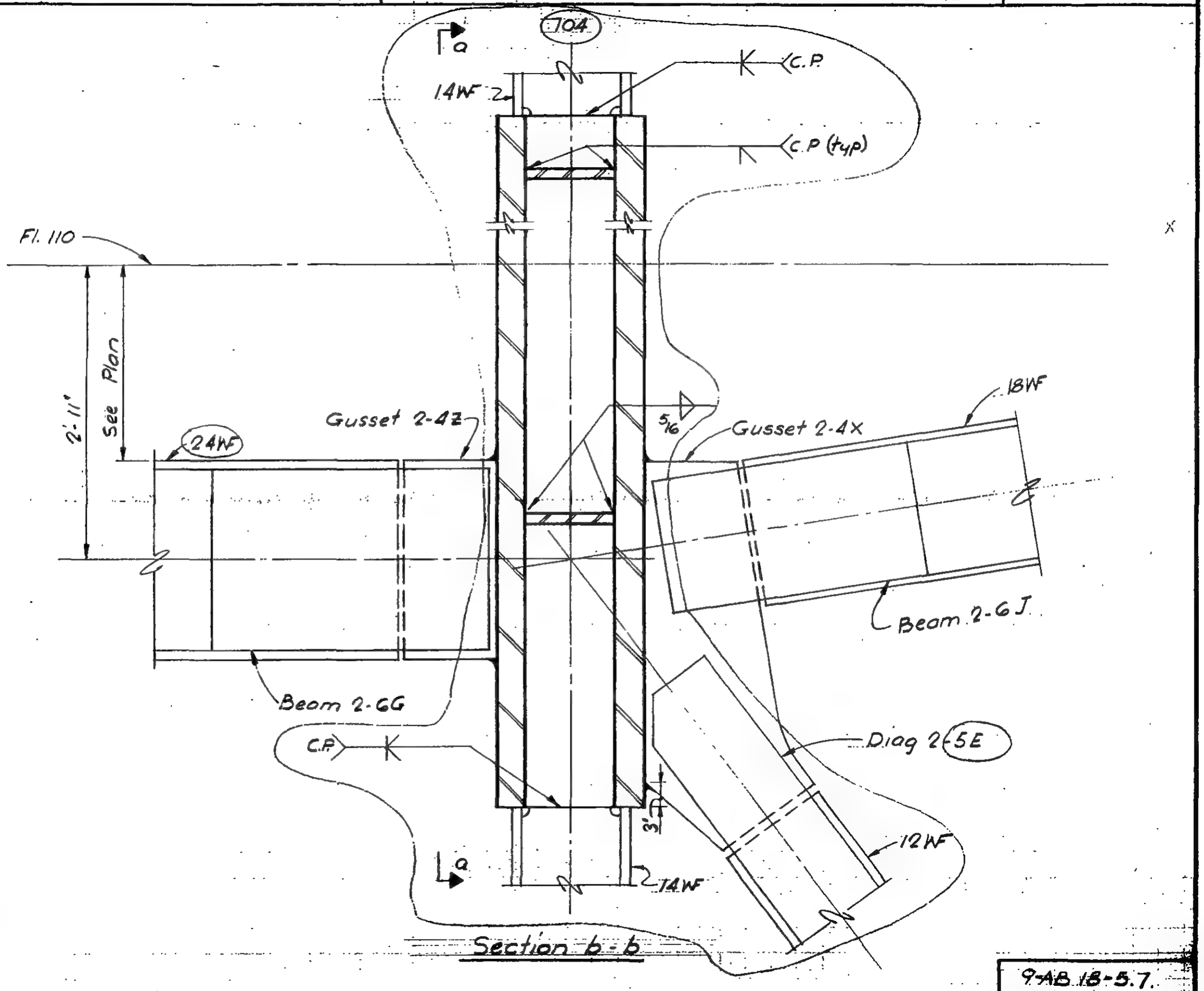

LICENSED PROFESSIONAL ENGINEER LESLIE E. ROBERTSON No. 34360 UNIVERSITY OF THE STATE OF NEW YORK

DESIGNED L. Quirko

DRAWN T. Terrelonge

REVIEWED

9-AB 18-5.7.

SKILLING, HELLE, CHRISTIANSEN, ROBERTSON — Structural & Civil Engineers

PROJECT: THE WORLD TRADE CENTER | TITLE: FL 107-PH CONNECTION DETAILS-LINES 04 & 05 | DATE: 4-1-70

REVISIONS

7-10-70

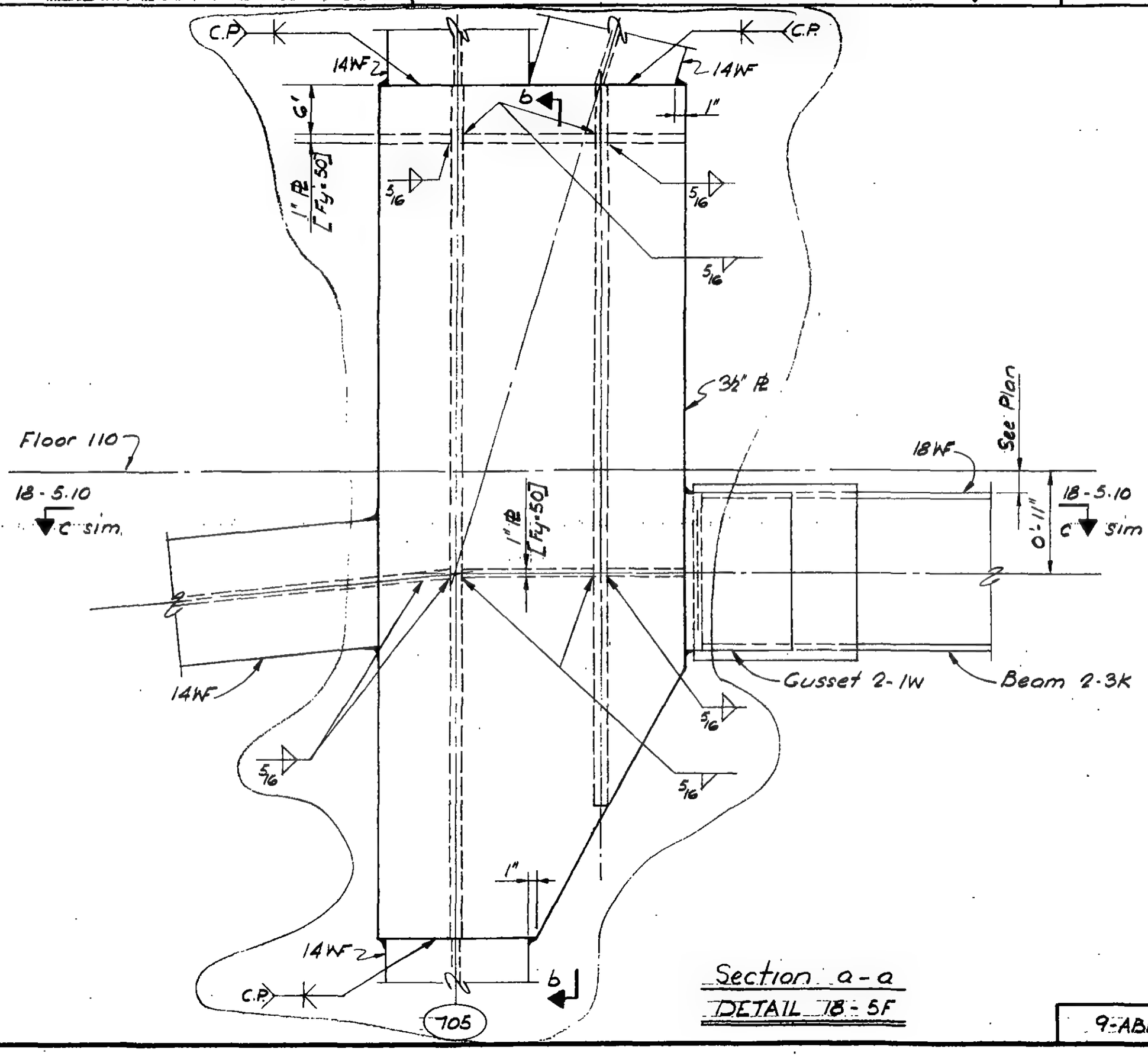

Section a-a

DETAIL 18-5F

LICENSED PROFESSIONAL ENGINEER — LESLIE E. ROBERTSON — No 34360 — UNIVERSITY OF THE STATE OF NEW YORK

DESIGNED

DRAWN T. Terrelonge

REVIEWED

9-AB18-5B

SKILLING, HELLE, CHRISTIANSEN, ROBERTSON — Structural & Civil Engineers

PROJECT THE WORLD TRADE CENTER | TITLE Fl. 107 - PH CONNECTION DETAILS - LINES 04 & 05 | DATE 4-1-70

REVISIONS

7-10-70

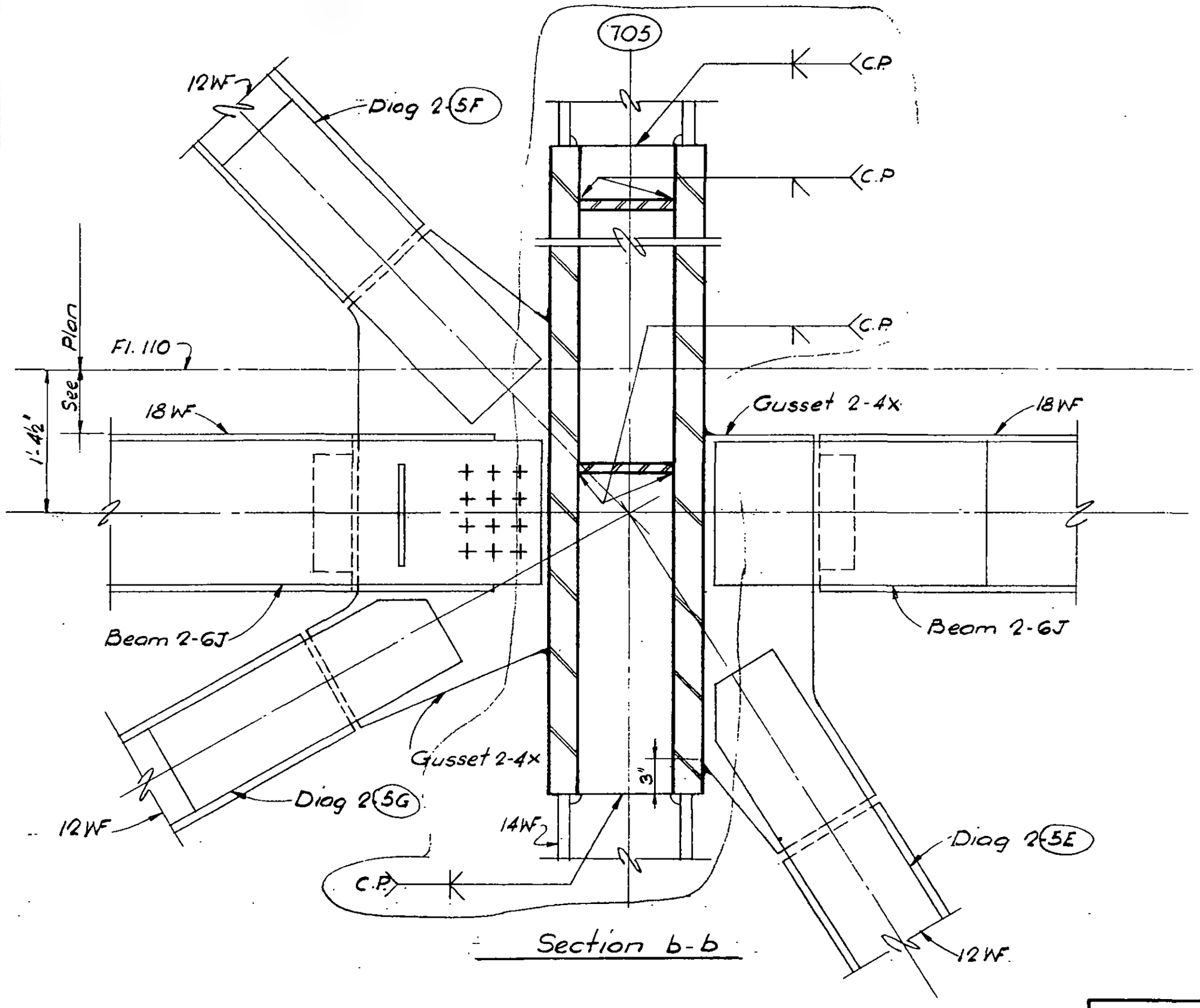

Section b-b

LICENSED PROFESSIONAL ENGINEER
LESLIE E. ROBERTSON
No. 34360
UNIVERSITY OF THE STATE OF NEW YORK

DESIGNED

DRAWN
T. Terrelonge

REVIEWED

9. AB18-5.9.

SKILLING, HELLE, CHRISTIANSEN, ROBERTSON — Structural & Civil Engineers

PROJECT: THE WORLD TRADE CENTER | TITLE: FL 107-PH CONNECTION DETAILS- LINE 04 & 05 | DATE: 7-10-70

REVISIONS

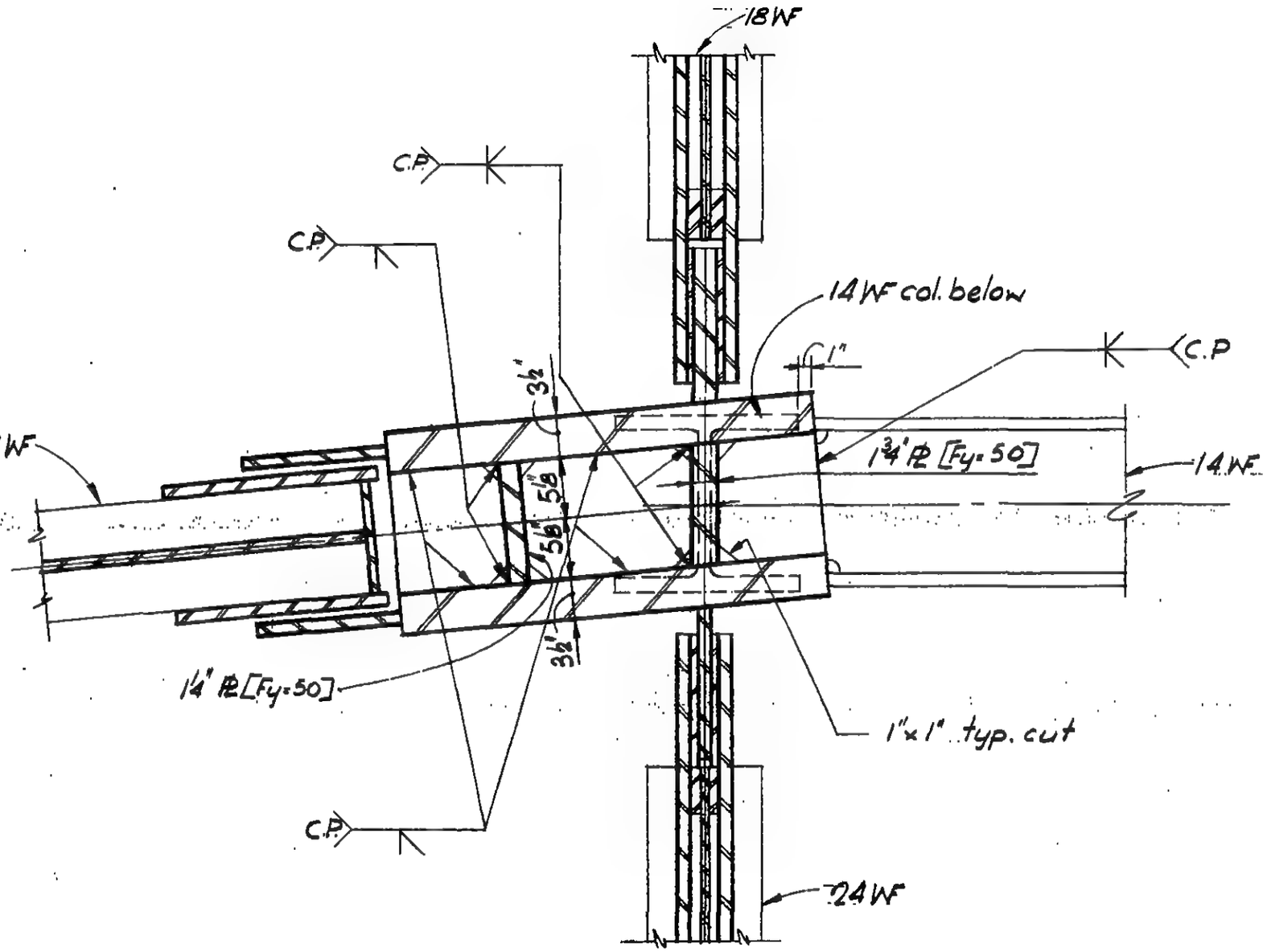

Section C-C

PLAN

LICENSED PROFESSIONAL ENGINEER — LESLIE E. ROBERTSON — No. 34360 — UNIVERSITY OF THE STATE OF NEW YORK

DESIGNED: L. Quirko

DRAWN: T. Terrelonge

REVIEWED:

9AB18-5.10

SKILLING, HELLE, CHRISTIANSEN, ROBERTSON — Structural & Civil Engineers

PROJECT THE WORLD TRADE CENTER | TITLE Fl. 107-PH CONNECTION DETAILS -LINES 04 & 05 | DATE 4-1-70

REVISIONS

7/8/70

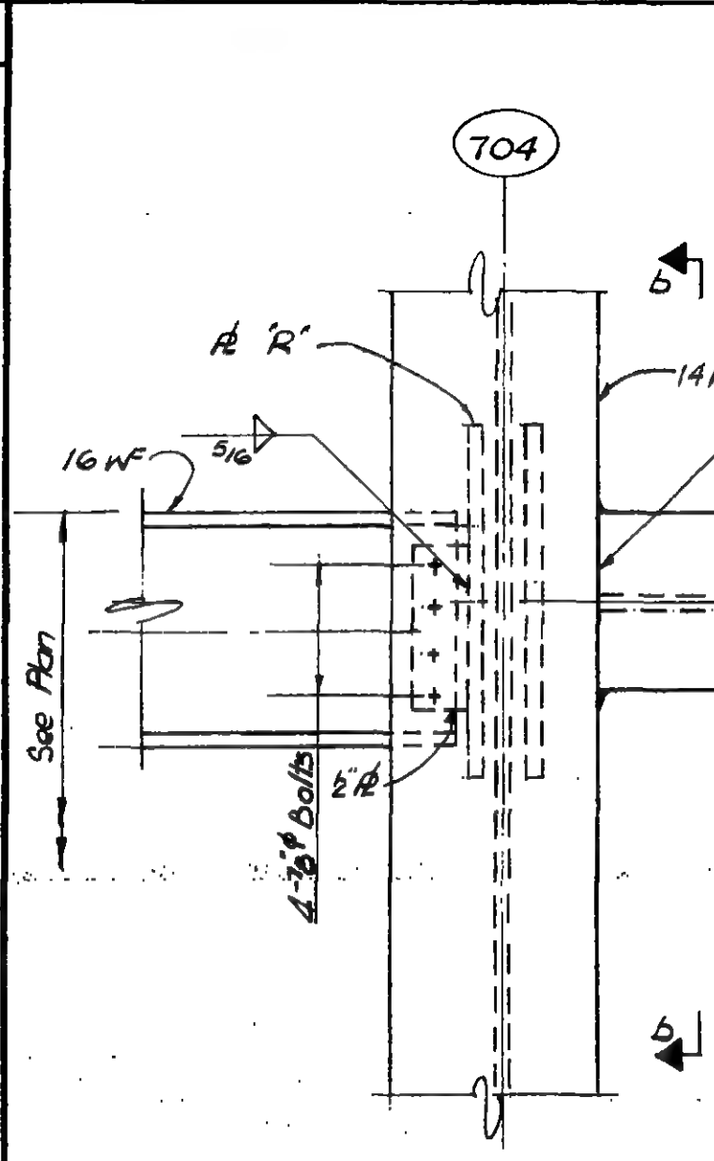

Section a-a
Detail 18-5G

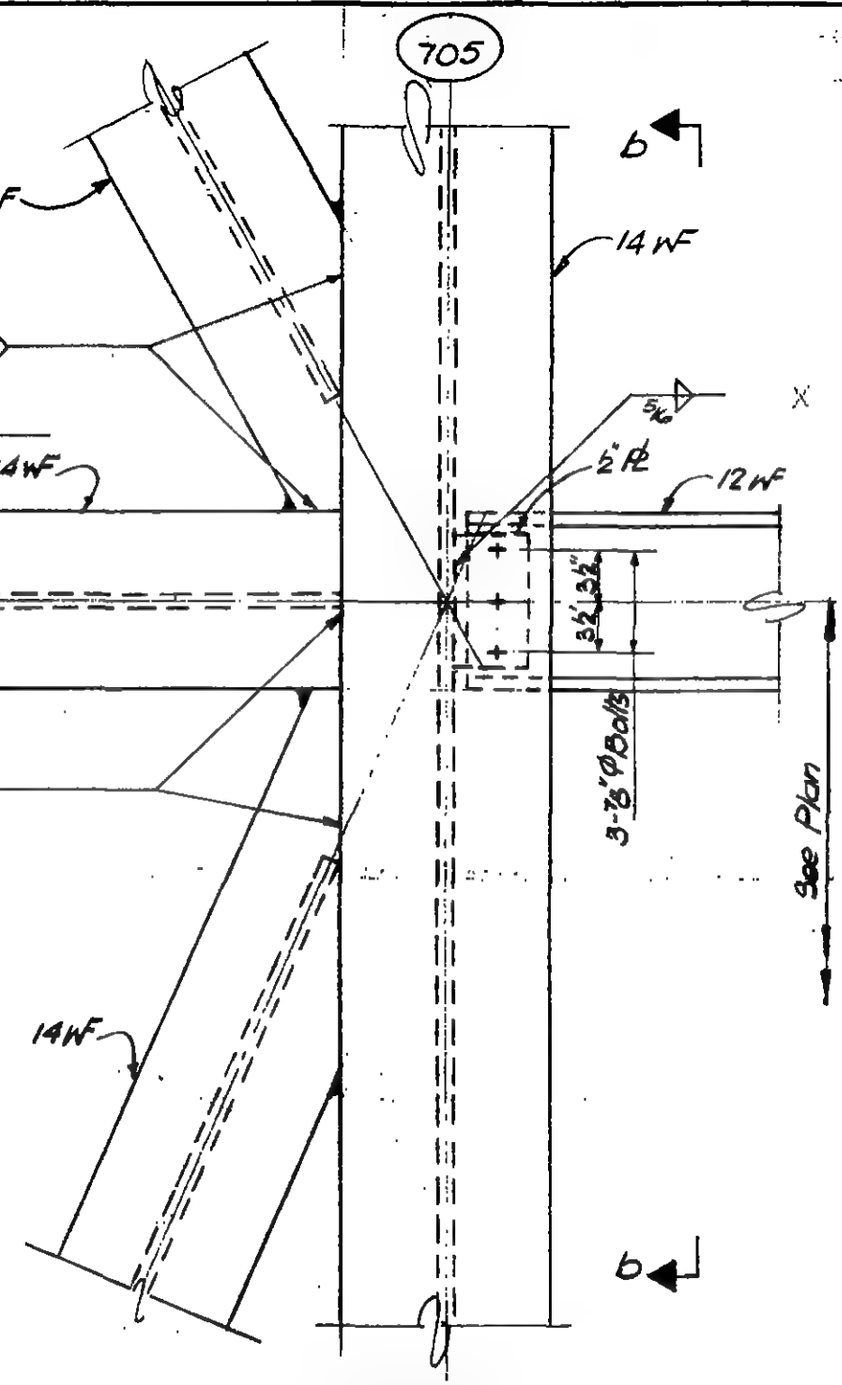

Section a-a
Detail 18-5H

LICENSED PROFESSIONAL ENGINEER
LESLIE E. ROBERTSON
No. 34260
UNIVERSITY OF THE STATE OF NEW YORK

DESIGNED

DRAWN
D. Huggins

REVIEWED
E. Dracos

9-AB 18-5.14

SKILLING, HELLE, CHRISTIANSEN, ROBERTSON — Structural & Civil Engineers

PROJECT: THE WORLD TRADE CENTER | TITLE: Fl. 107- PH CONNECTION DETAILS - LINES 04 & 05 | DATE: 4-1-70

REVISIONS

7/8/70

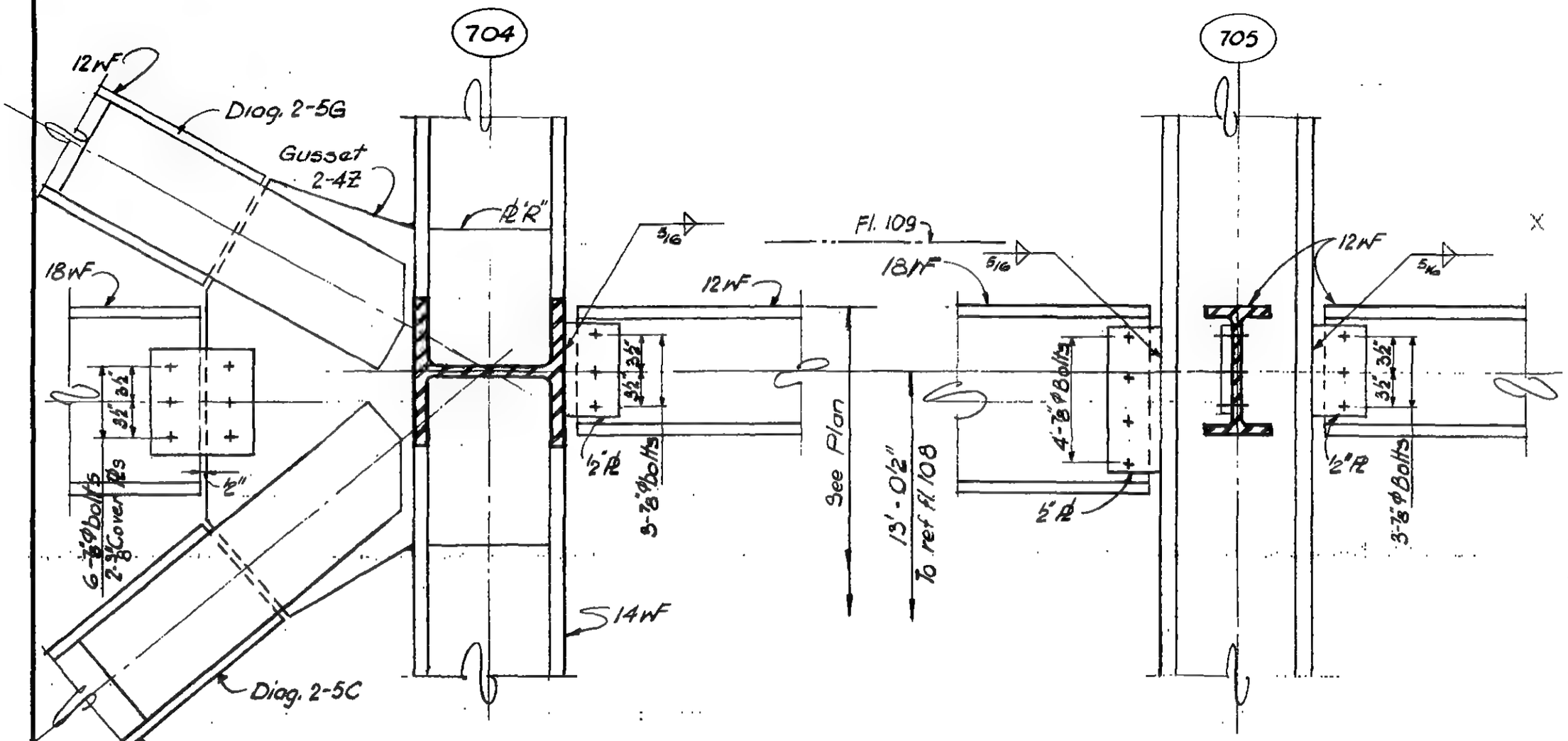

Section b-b

LICENSED PROFESSIONAL ENGINEER
LESLIE E. ROBERTSON
No. 34360
UNIVERSITY OF THE STATE OF NEW YORK

DESIGNED

DRAWN
D. Huggins

REVIEWED
E. Drakos

9-AB-18-5.15

SKILLING, HELLE, CHRISTIANSEN, ROBERTSON — Structural & Civil Engineers

PROJECT: THE WORLD TRADE CENTER | TITLE: FLOOR 107-PH CONNECTION DETAILS-LINES 04 & 05 | DATE: 4-1-70

REVISIONS

6-22-70

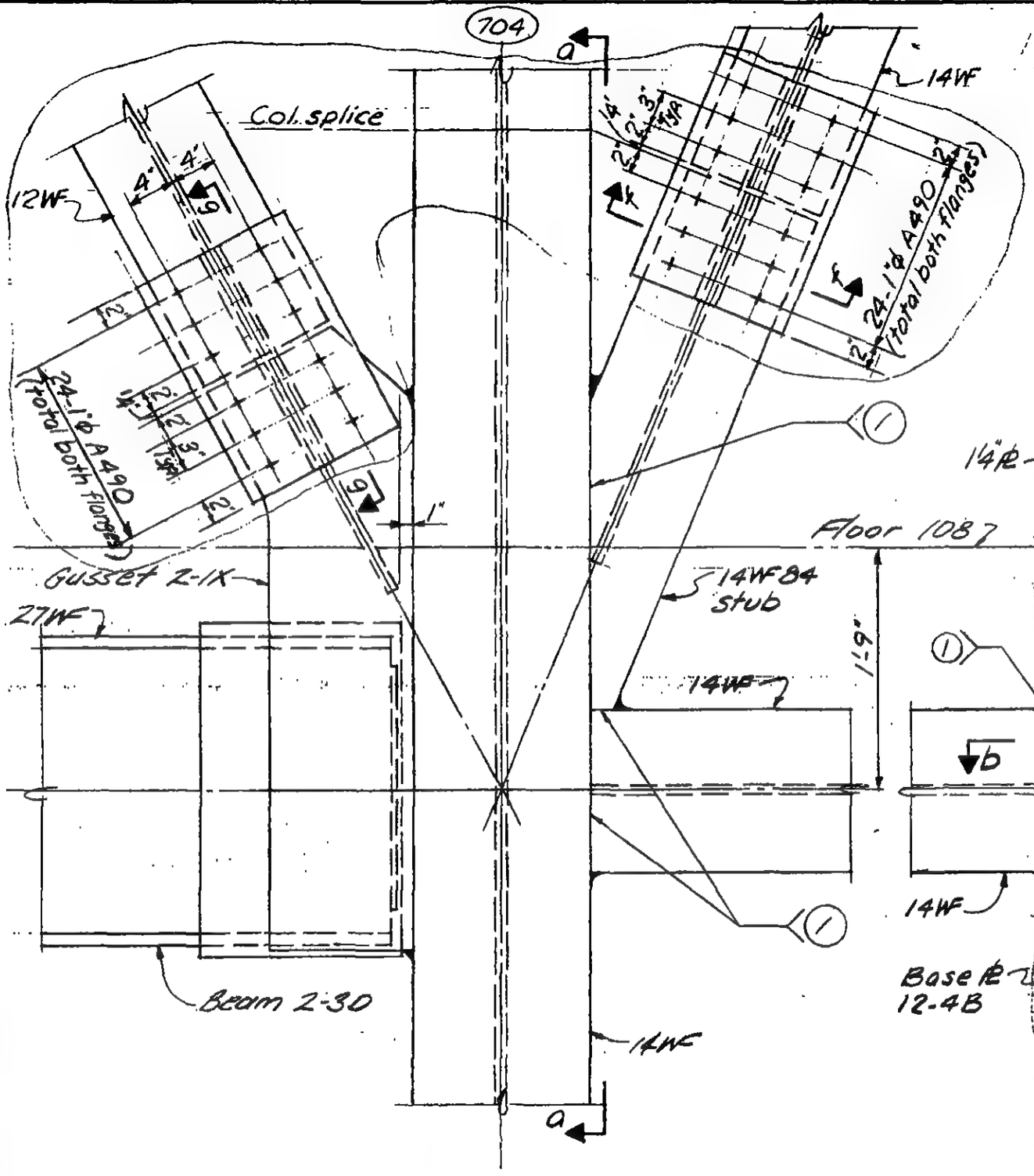

Detail 18-5J

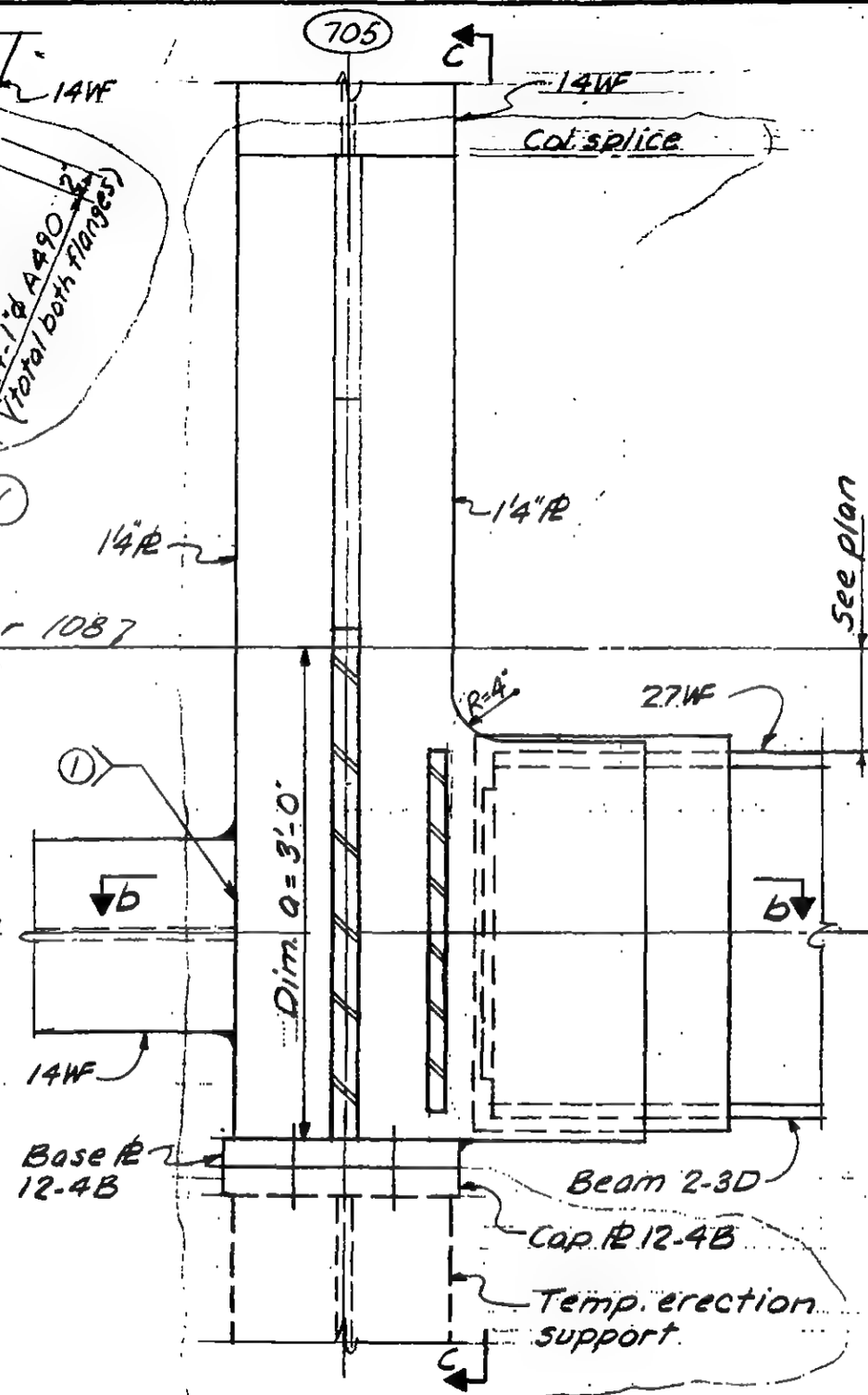

Detail 18-5K

LICENSED PROFESSIONAL ENGINEER — LESLIE E. ROBERTSON — No. 34360 — UNIVERSITY OF THE STATE OF NEW YORK

DESIGNED

DRAWN

REVIEWED

9-AB18-5.16

SKILLING, HELLE, CHRISTIANSEN, ROBERTSON — Structural & Civil Engineers

PROJECT: THE WORLD TRADE CENTER | TITLE: FL 107 - PH CONNECTION DETAILS - LINE 04 & 05 | DATE: 4-1-70

REVISIONS

6-22-70

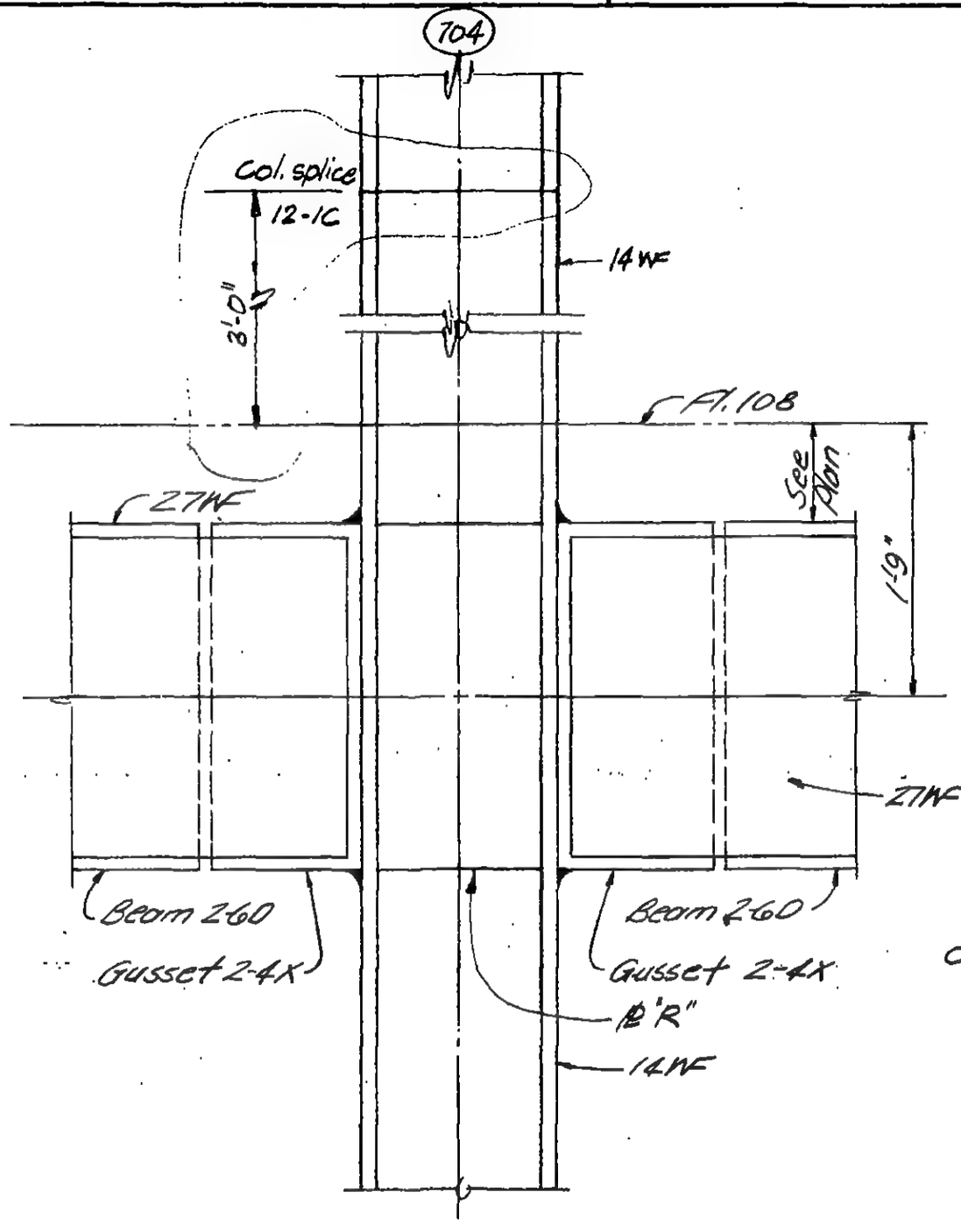

Section a-a

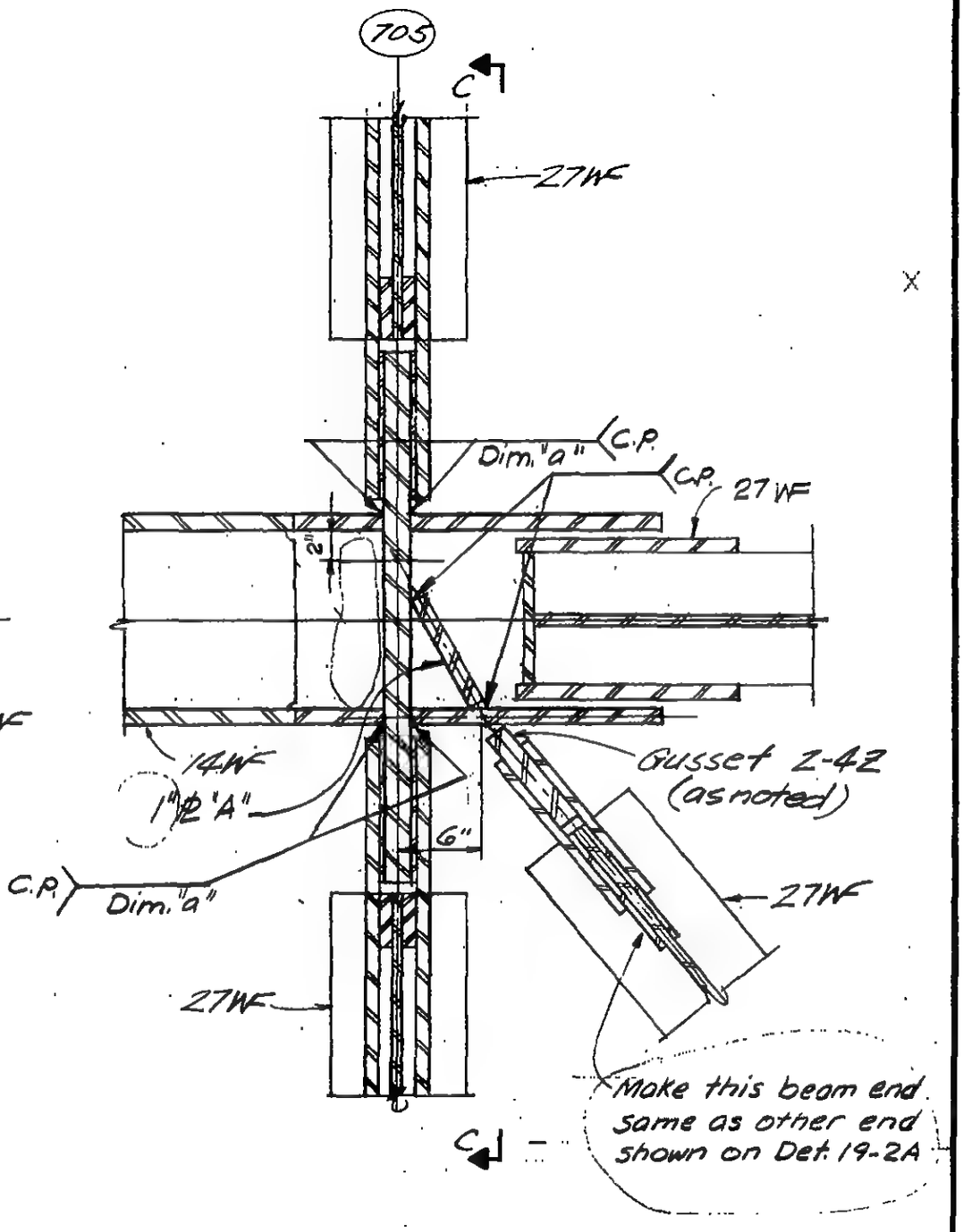

Section b-b

LICENSED PROFESSIONAL ENGINEER — LESLIE E. ROBERTSON — No. 34360 — UNIVERSITY OF THE STATE OF NEW YORK

DESIGNED

DRAWN

REVIEWED

9-AB18-5.17

SKILLING, HELLE, CHRISTIANSEN, ROBERTSON — Structural & Civil Engineers

PROJECT: THE WORLD TRADE CENTER | TITLE: FL 107 - PH CONNECTION DETAILS - LINES 04 & 05 | DATE: 4 - 1 - 70

REVISIONS

6-22-70

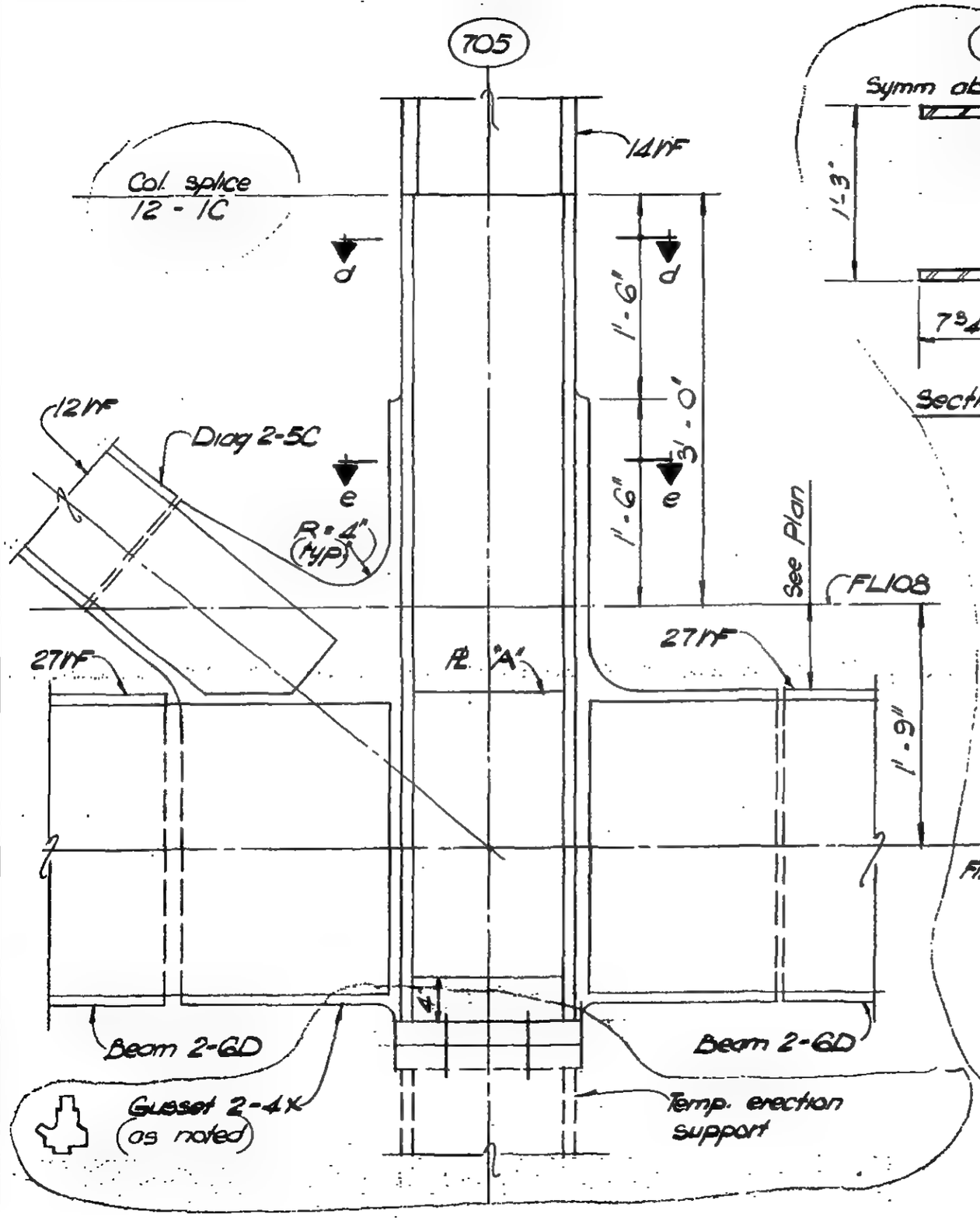

Section c - c

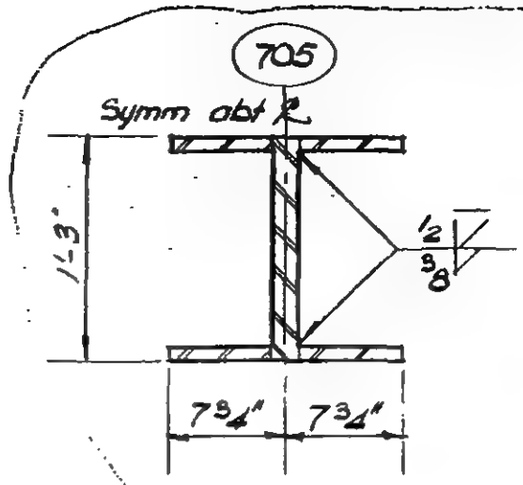

Section d - d

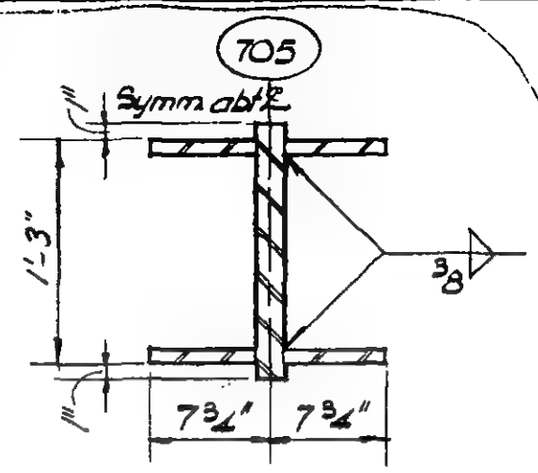

Section e - e

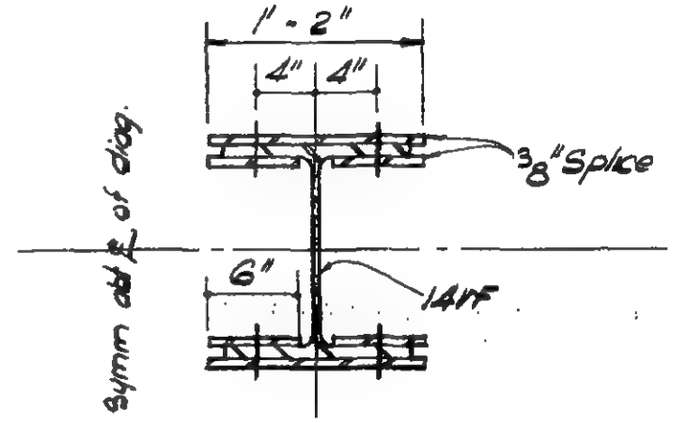

Section f - f

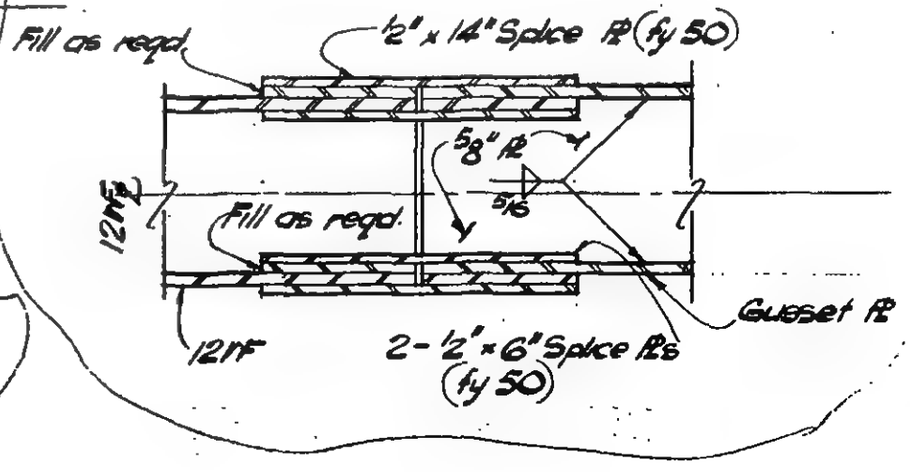

Section g - g

LICENSED PROFESSIONAL ENGINEER
LESLIE E. ROBERTSON
No. 34360
UNIVERSITY OF THE STATE OF NEW YORK

DESIGNED

DRAWN
W. Clarke

REVIEWED

SKILLING, HELLE, CHRISTIANSEN, ROBERTSON — Structural & Civil Engineers

PROJECT: THE WORLD TRADE CENTER | TITLE: FLOOR 107-PH CONNECTION DETAILS-LINES 04 & 05 | DATE: 4-1-70

REVISIONS

6-22-70

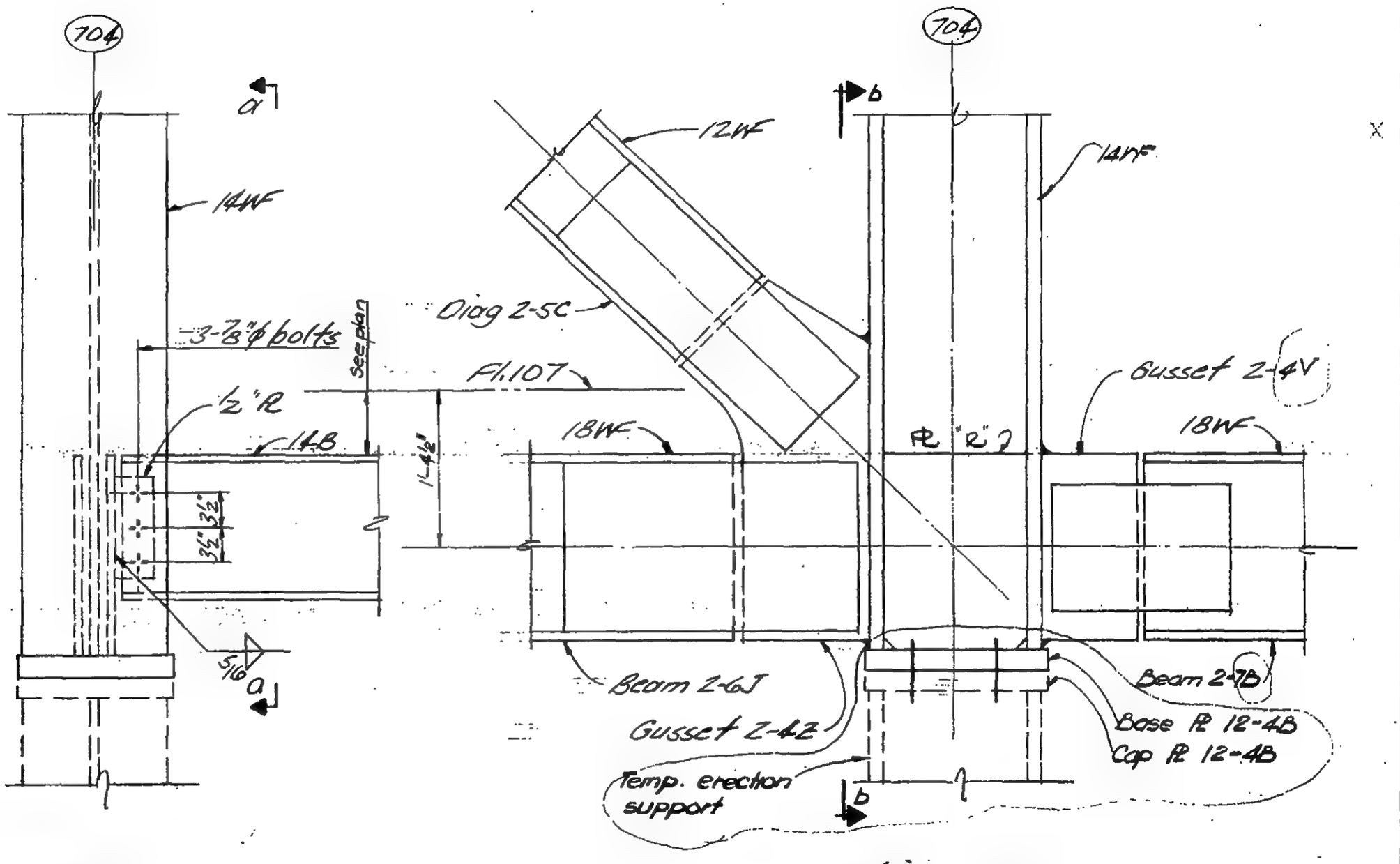

Section b-b

Section a-a

DETAIL 18-5M.

LICENSED PROFESSIONAL ENGINEER — LESLIE E. ROBERTSON — No. 34360 — UNIVERSITY OF THE STATE OF NEW YORK

DESIGNED

DRAWN

REVIEWED

9-4818-5.19

SKILLING, HELLE, CHRISTIANSEN, ROBERTSON — Structural & Civil Engineers

PROJECT THE WORLD TRADE CENTER | TITLE FL 107 - PH CONNECTION DETAILS - LINES 004 & 005 | DATE 10-12-70

REVISIONS

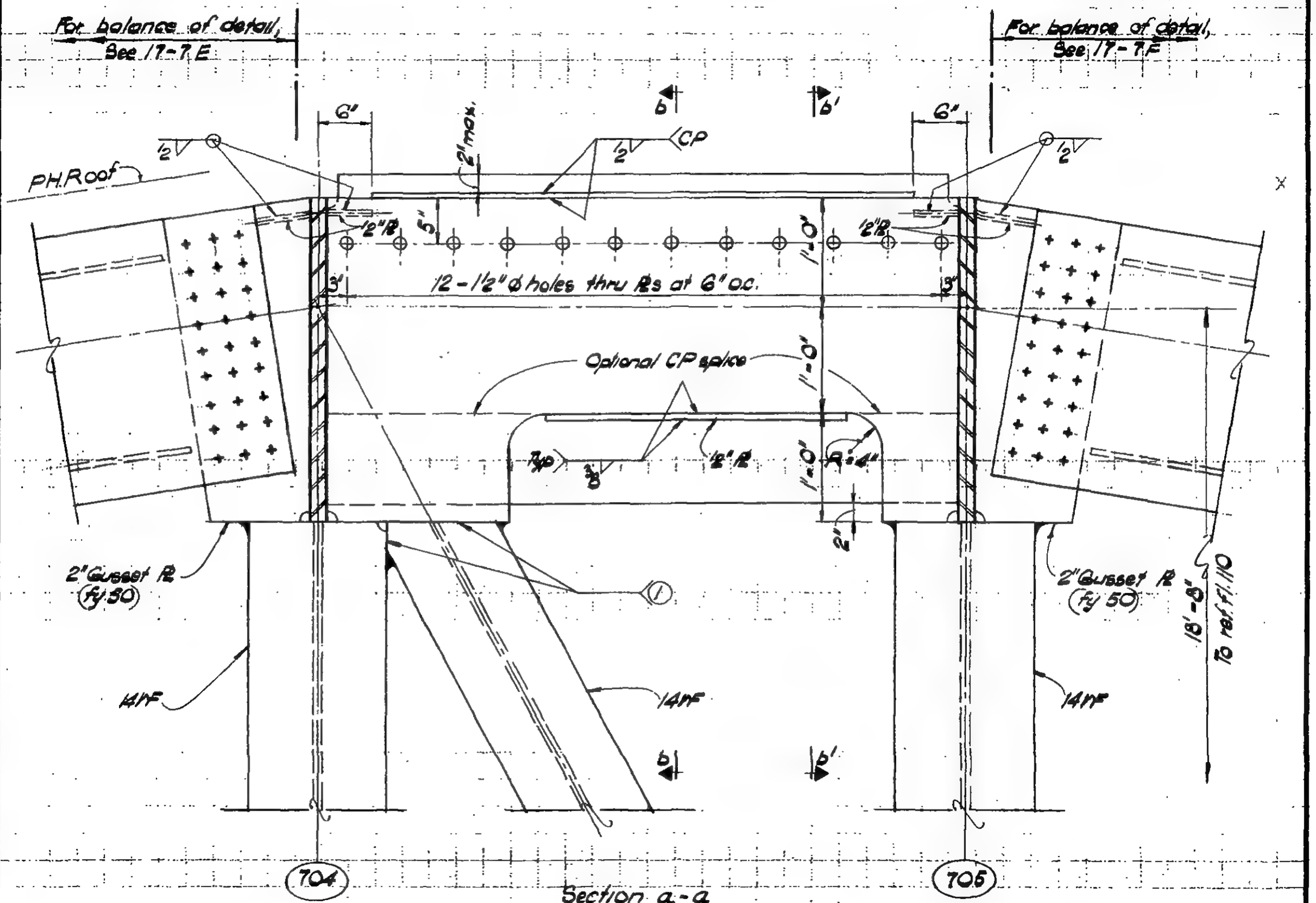

Section a-a

DETAIL 18-5P

DETAIL 18-5Q

LICENSED PROFESSIONAL ENGINEER — LESLIE E. ROBERTSON — No 34360 — UNIVERSITY OF THE STATE OF NEW YORK

DESIGNED

DRAWN M. Clarke

REVIEWED

9-8/8-5:30

SKILLING, HELLE, CHRISTIANSEN, ROBERTSON — Structural & Civil Engineers

PROJECT THE WORLD TRADE CENTER | TITLE FL 107 - RH CONNECTION DETAILS - LINES 004 & 005 | DATE 10-12-70

REVISIONS

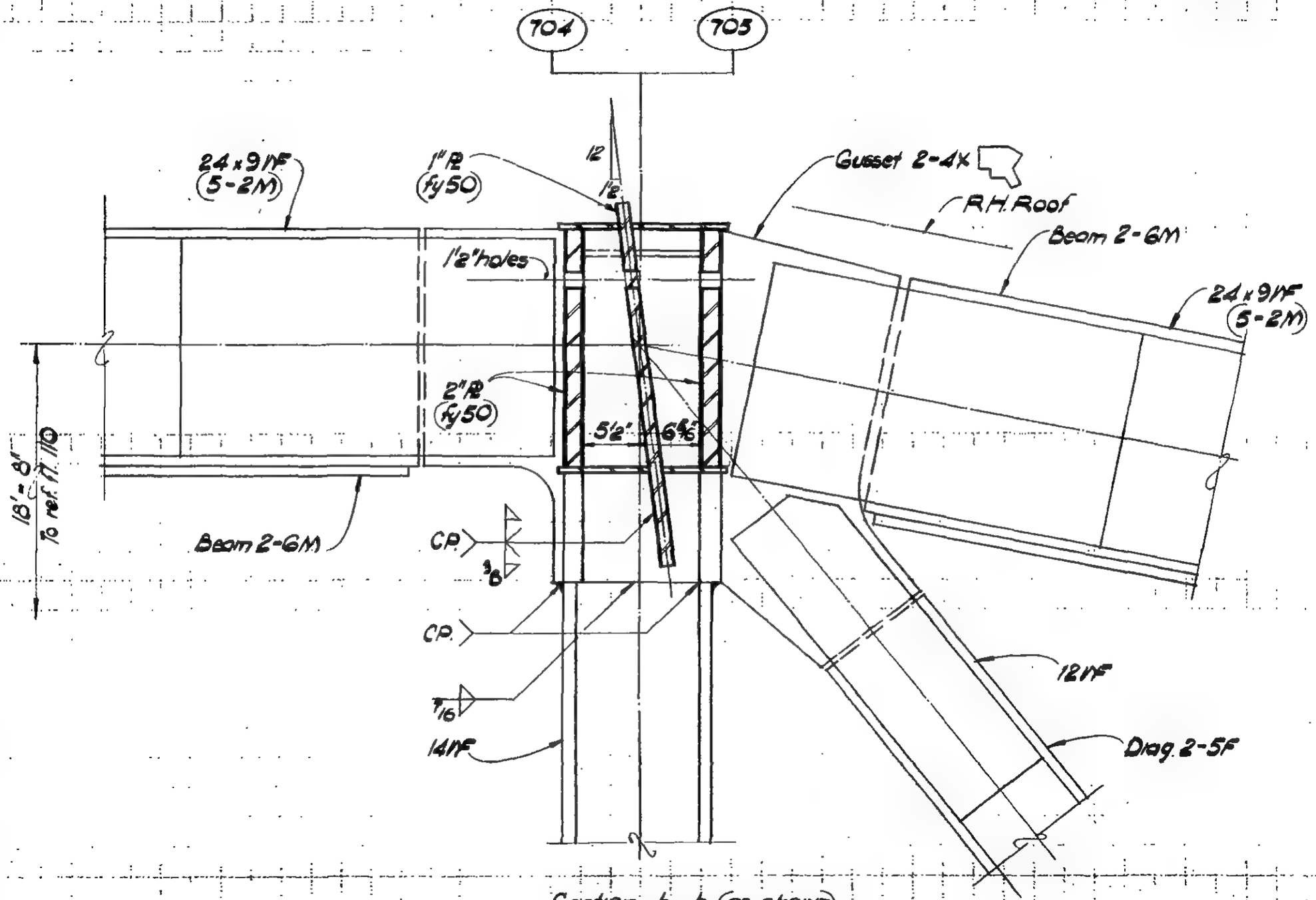

Section b-b (as shown)
Section b'-b' (opp hand)

LICENSED PROFESSIONAL ENGINEER — LESLIE E. ROBERTSON — No. 34860 — UNIVERSITY OF THE STATE OF NEW YORK

DESIGNED

DRAWN M. Clarke

REVIEWED

9-B 18-5.31

SKILLING, HELLE, CHRISTIANSEN, ROBERTSON — Structural & Civil Engineers

PROJECT THE WORLD TRADE CENTER | TITLE FL 107 - PH CONNECTION DETAILS - LINES 04 & 05 | DATE 4-1-70

REVISIONS

7/10/70
12/14/70

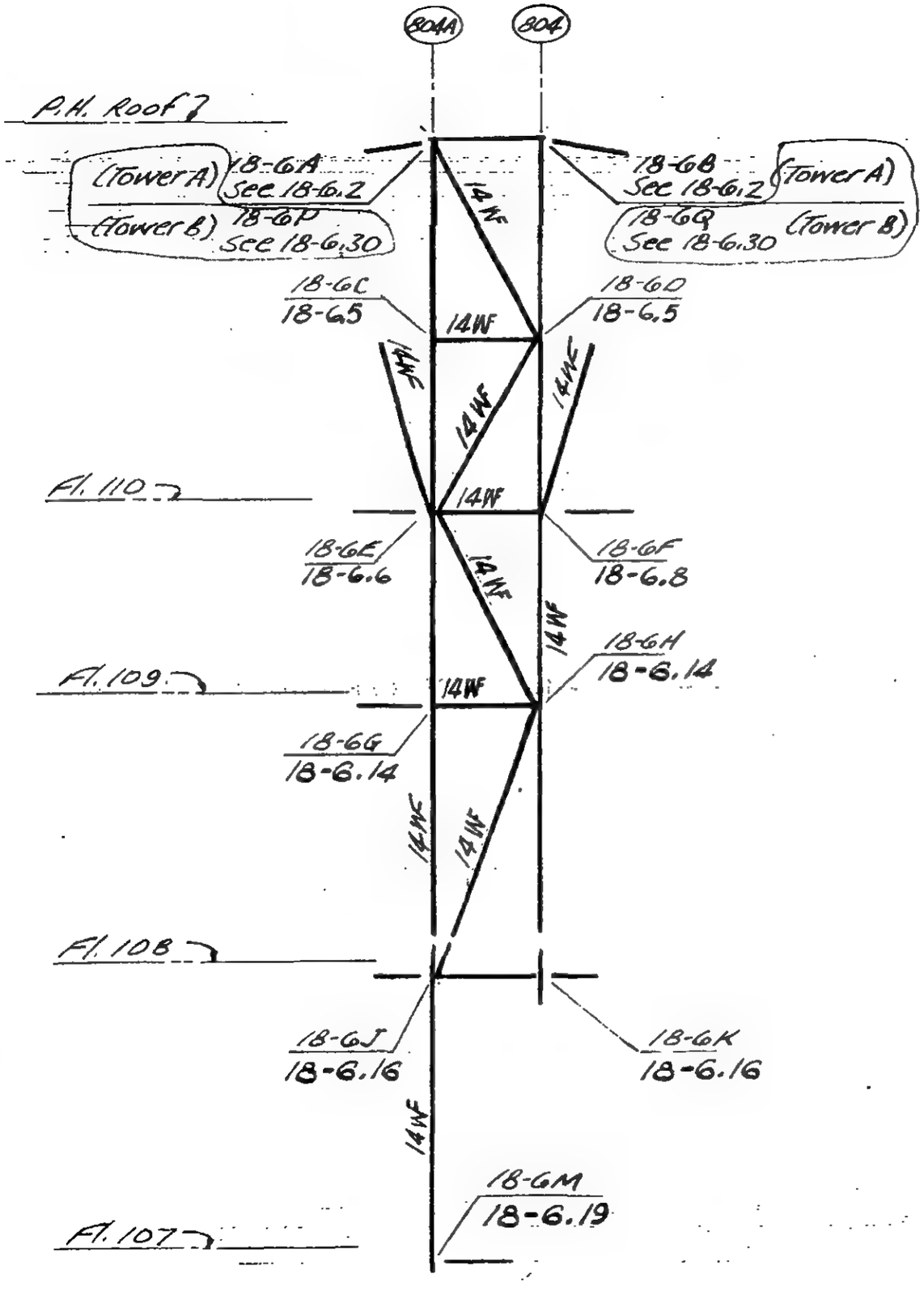

DETAIL 18-6

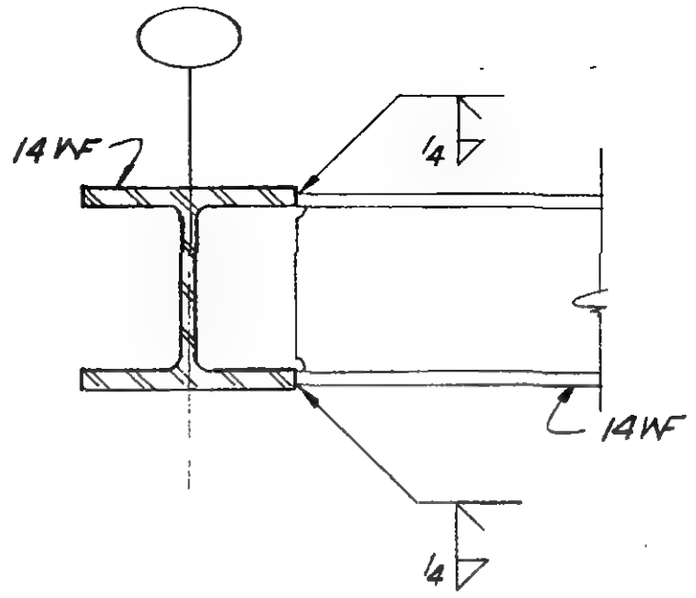

Detail (1)

LICENSED PROFESSIONAL ENGINEER — LESLIE E. ROBERTSON — No. 34360 — UNIVERSITY OF THE STATE OF NEW YORK

DESIGNED

DRAWN M. Nichols

REVIEWED

9-AB18-6.1

SKILLING, HELLE, CHRISTIANSEN, ROBERTSON — Structural & Civil Engineers

PROJECT THE WORLD TRADE CENTER | TITLE FL 107 - PH CONNECTION DETAILS - LINES 004 & 005 | DATE 7-10-70

REVISIONS

10-12-70

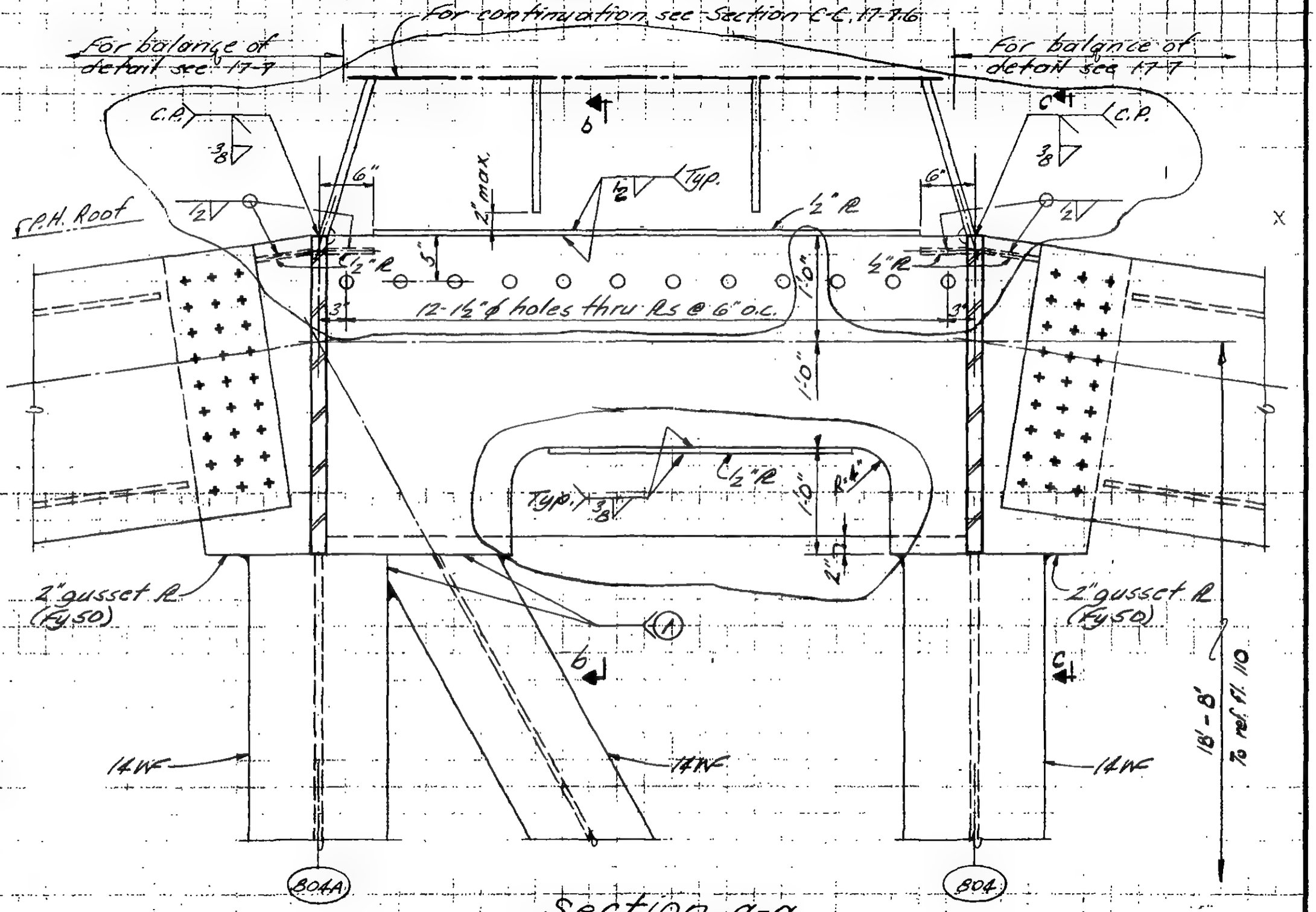

Section a-a

Detail 18-6A

Detail 18-6B

DESIGNED

DRAWN
S. Adams

REVIEWED

9-A 18-6.2

SKILLING, HELLE, CHRISTIANSEN, ROBERTSON — Structural & Civil Engineers

PROJECT: THE WORLD TRADE CENTER | TITLE: FL 107-RM CONNECTION DETAILS-LINES 004&005 | DATE: 7-10-70

REVISIONS

10-12-70

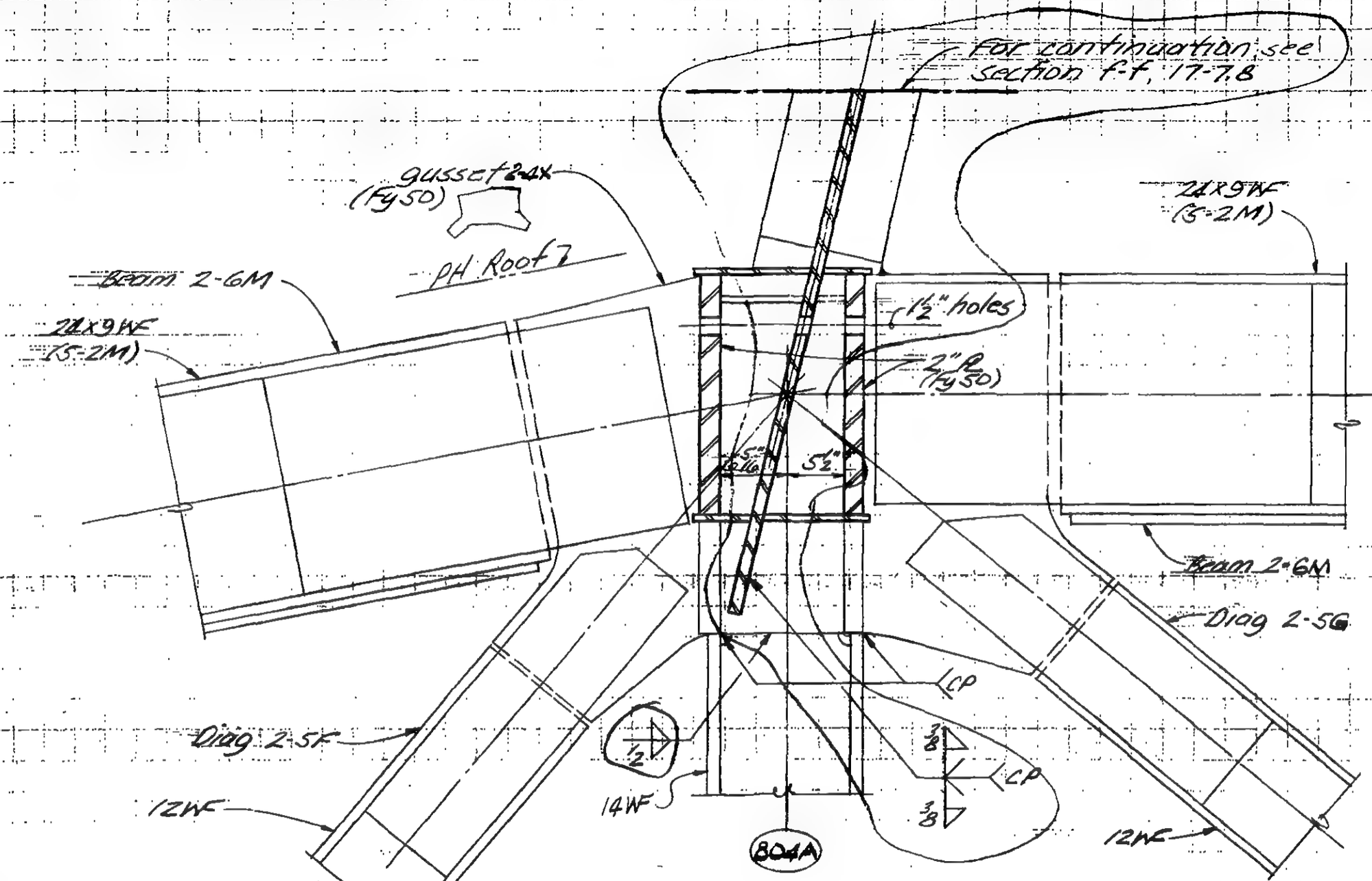

Section b-b

LICENSED PROFESSIONAL ENGINEER — LESLIE E. ROBERTSON — No. 34360 — UNIVERSITY OF THE STATE OF NEW YORK

DESIGNED

DRAWN: S. Adams

REVIEWED

9-A 18-6.3

SKILLING, HELLE, CHRISTIANSEN, ROBERTSON — Structural & Civil Engineers

PROJECT: THE WORLD TRADE CENTER

TITLE: FL 107-PH CONNECTION DETAILS - LINES 004 & 005

DATE: 7/10/70

REVISIONS

10/12/70

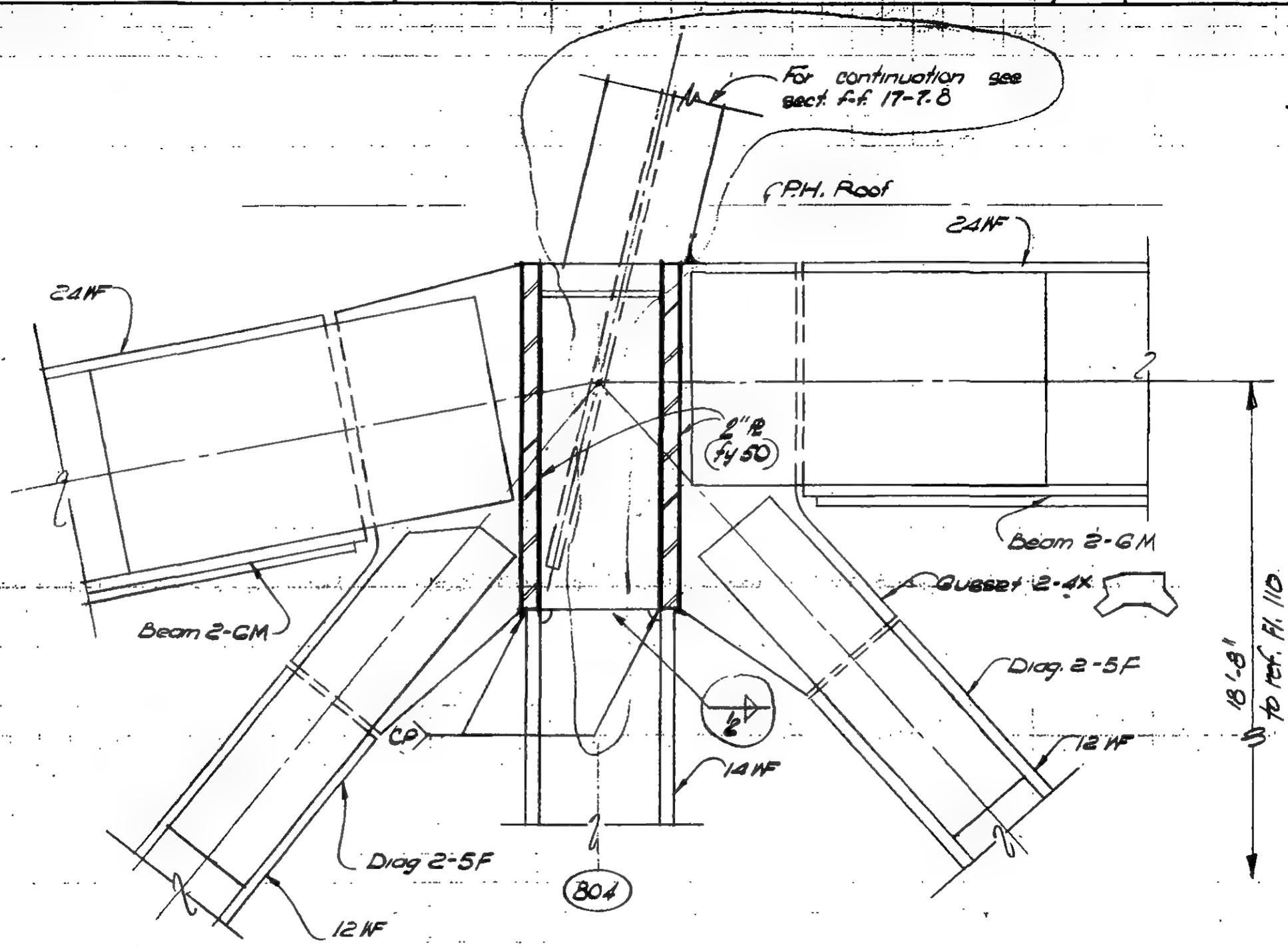

Section C-C

LICENSED PROFESSIONAL ENGINEER — LESLIE E. ROBERTSON — No. 34360 — UNIVERSITY OF THE STATE OF NEW YORK

DESIGNED: A. Patel

DRAWN: W. Clarke

REVIEWED:

9-A 18-6.4

SKILLING, HELLE, CHRISTIANSEN, ROBERTSON — Structural & Civil Engineers

PROJECT THE WORLD TRADE CENTER | TITLE FL 107-PH CONNECTION DETAILS - LINE 04 & 05 | DATE 7/10/70

REVISIONS

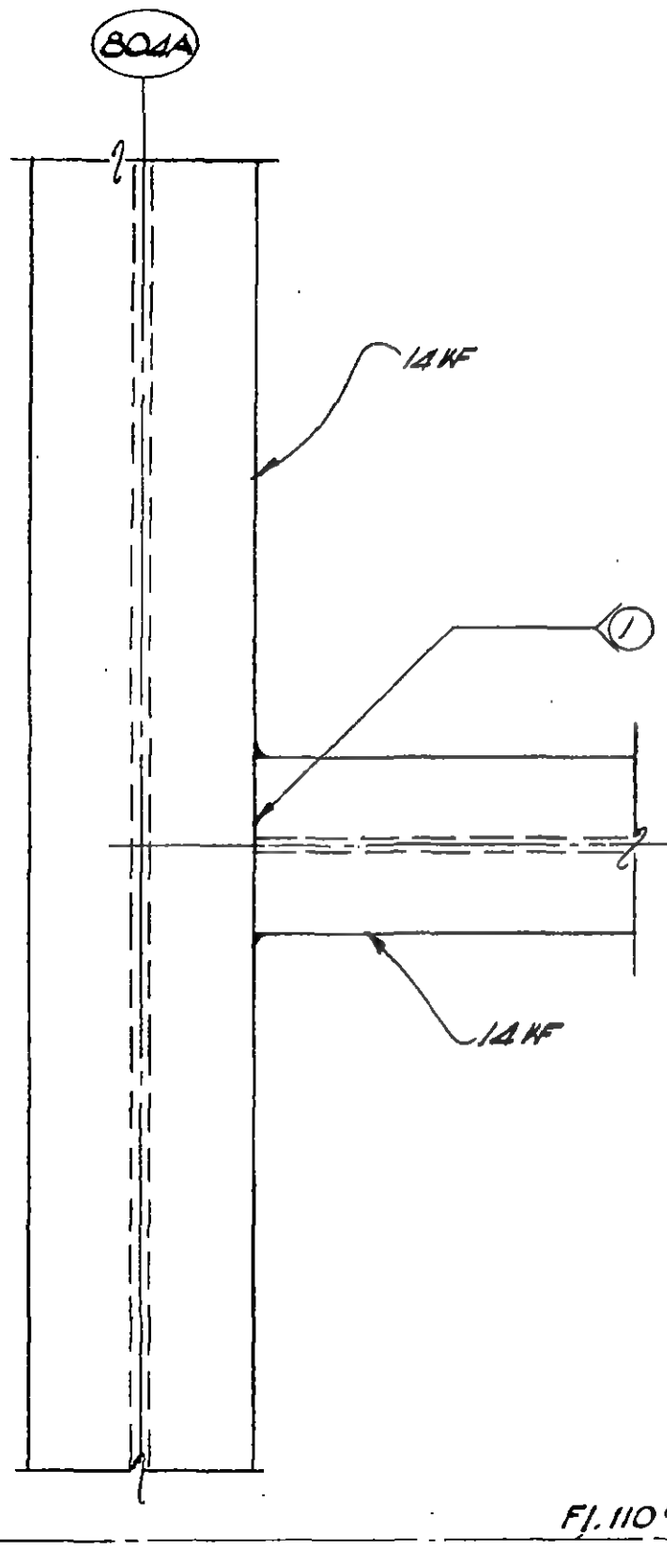

DETAIL 18-6C

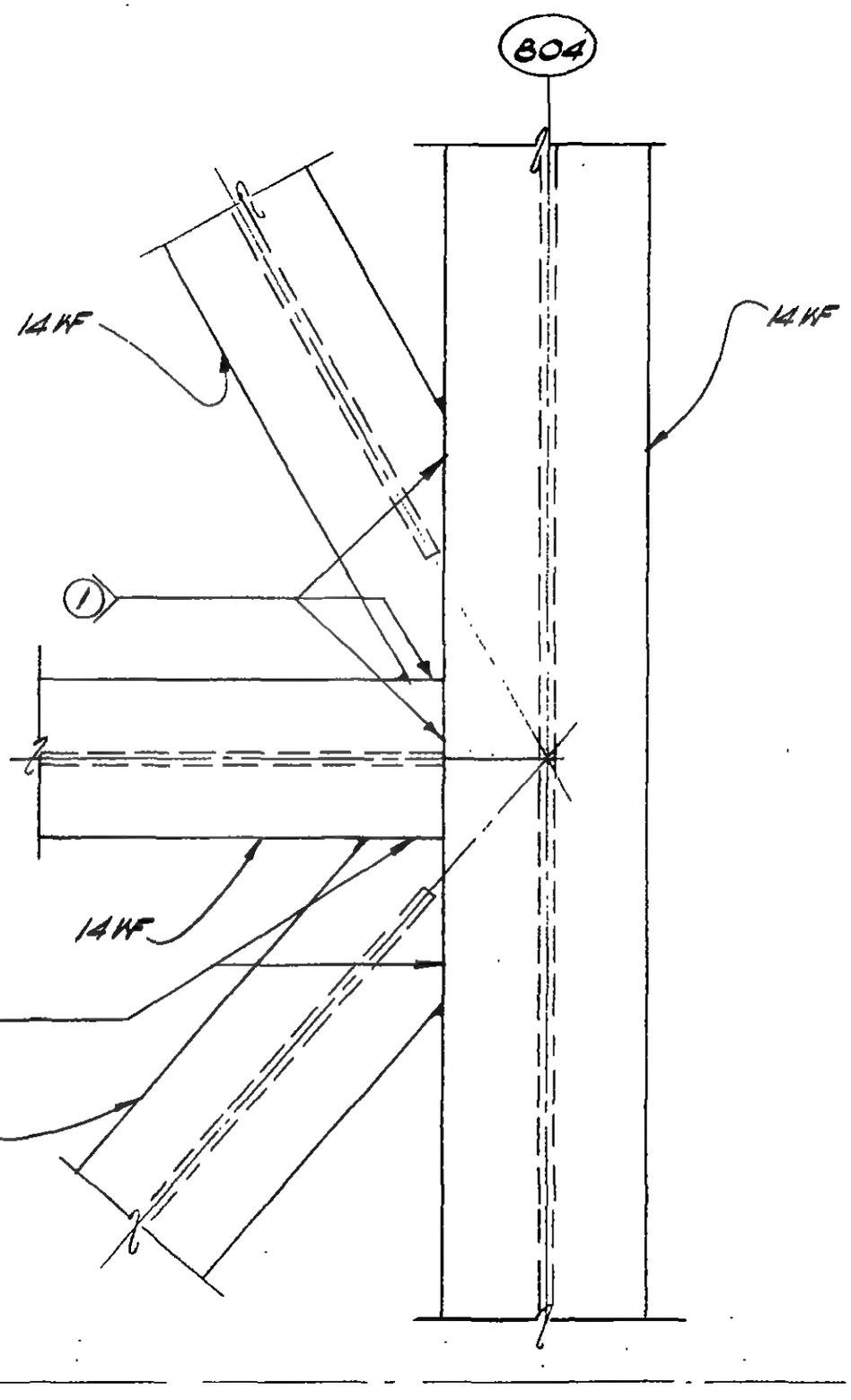

DETAIL 18-6D

LICENSED PROFESSIONAL ENGINEER
LESLIE E. ROBERTSON
No. 34360
UNIVERSITY OF THE STATE OF NEW YORK

DESIGNED A. Patel

DRAWN N. Clarke

REVIEWED

9-AB 18-6.5

SKILLING, HELLE, CHRISTIANSEN, ROBERTSON — Structural & Civil Engineers

PROJECT: THE WORLD TRADE CENTER | TITLE: Fl. 107-PH CONNECTION DETAILS-LINES 04 & 05 | DATE: 7-10-70

REVISIONS

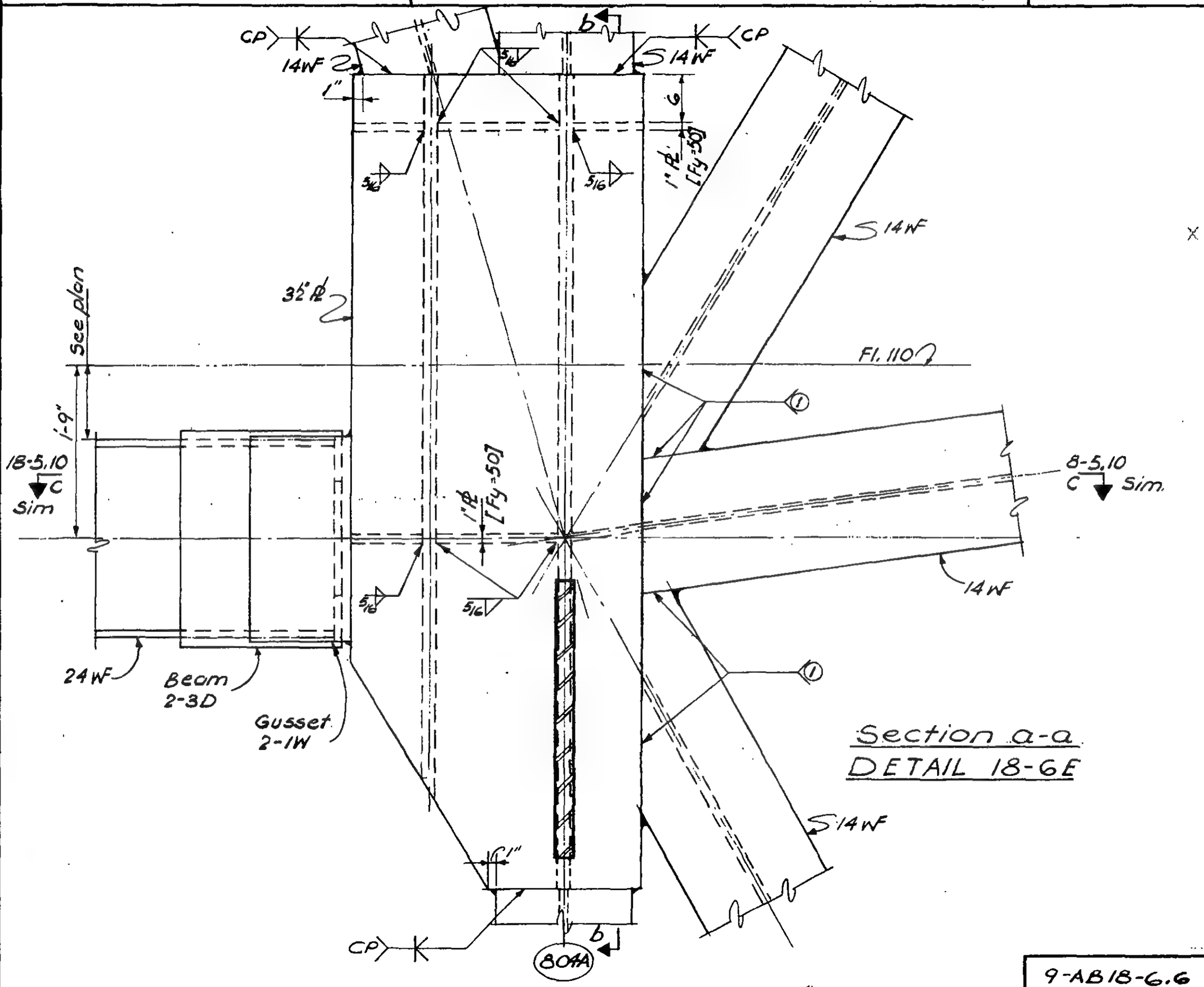

Section a-a
DETAIL 18-6E

LICENSED PROFESSIONAL ENGINEER — LESLIE E. ROBERTSON — No. 34360 — UNIVERSITY OF THE STATE OF NEW YORK

33

DESIGNED

DRAWN
D. Huggins

REVIEWED

9-AB18-6.6

SKILLING, HELLE, CHRISTIANSEN, ROBERTSON — Structural & Civil Engineers

PROJECT THE WORLD TRADE CENTER | TITLE Fl. 107 - PH CONNECTION DETAILS LINES 04 & 05 | DATE 7/10/70

REVISIONS

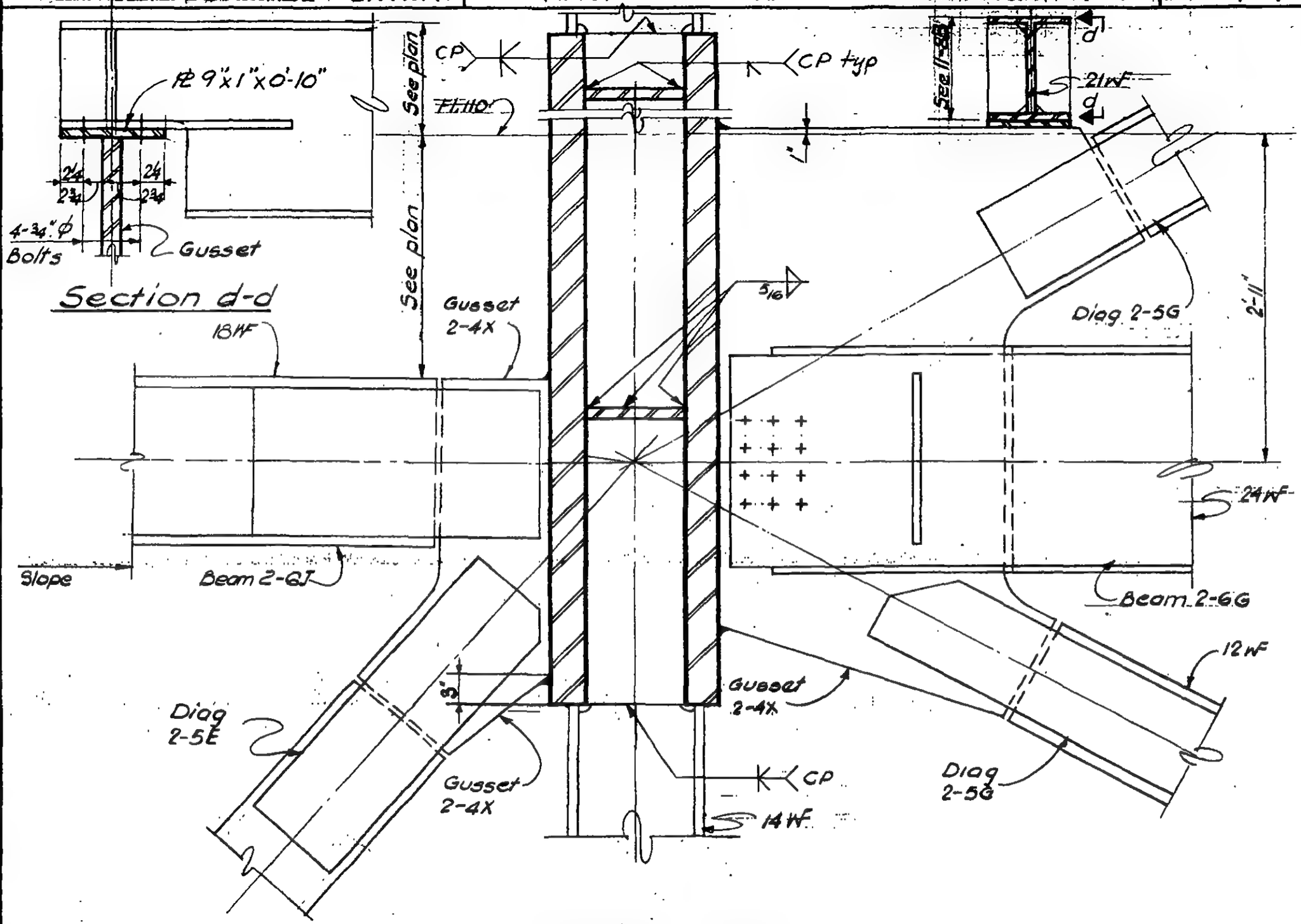

LICENSED PROFESSIONAL ENGINEER LESLIE E. ROBERTSON No. 34360 UNIVERSITY OF THE STATE OF NEW YORK

34

DESIGNED A. Patel

DRAWN D. Huggins

REVIEWED

9-AB.18-67

SKILLING, HELLE, CHRISTIANSEN, ROBERTSON — Structural & Civil Engineers

PROJECT THE WORLD TRADE CENTER | TITLE FL 107-PH, CONNECTION DETAILS LINES 04 & 05 | DATE 7/10/70

REVISIONS

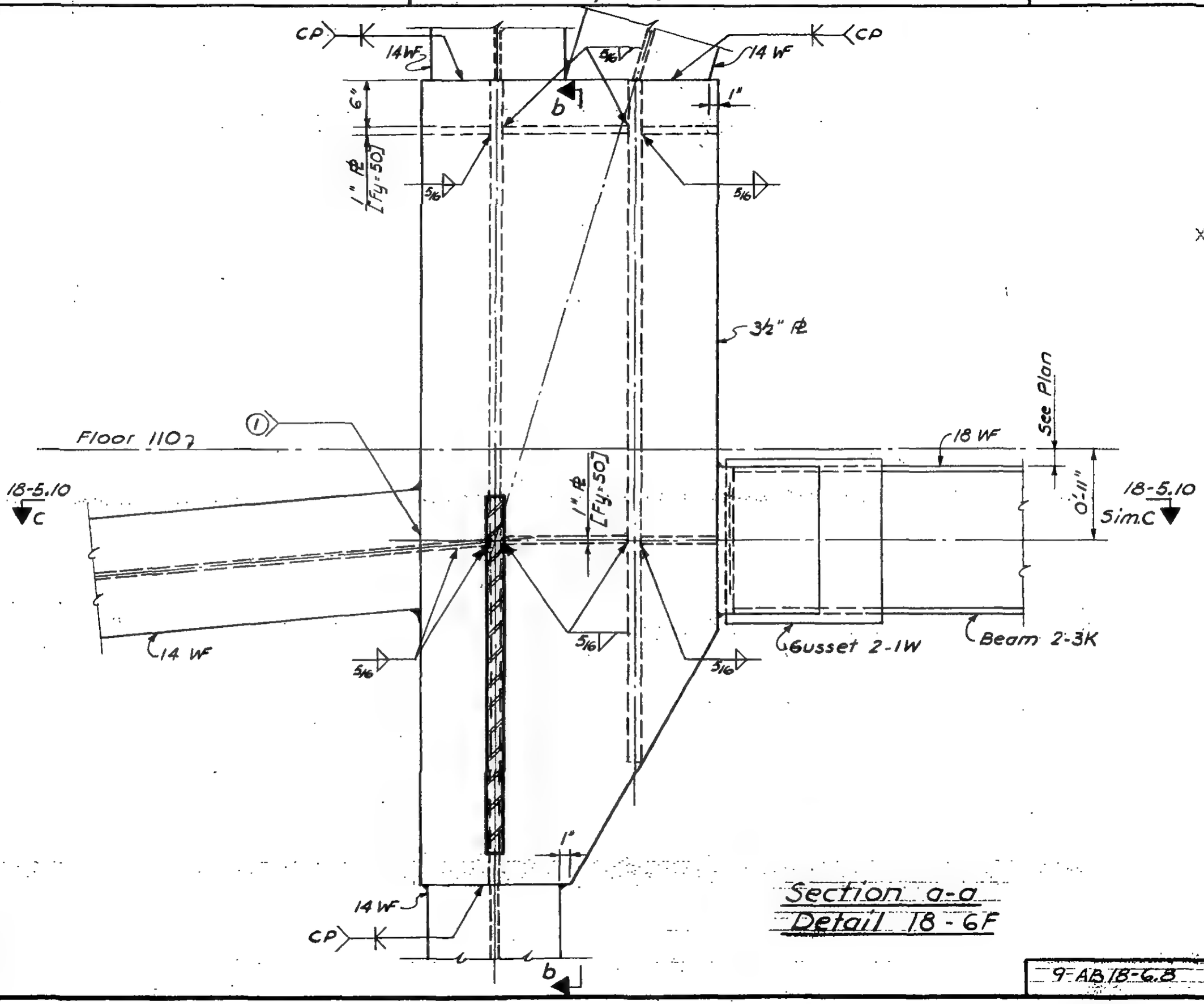

Section a-a
Detail 18-6F

DESIGNED

DRAWN F. Smith

REVIEWED

9-AB 18-6.8

SKILLING, HELLE, CHRISTIANSEN, ROBERTSON — Structural & Civil Engineers

PROJECT THE WORLD TRADE CENTER | TITLE FL 107-PH, CONNECTION DETAILS LINES 04 & 05 | DATE 7-10-70

REVISIONS

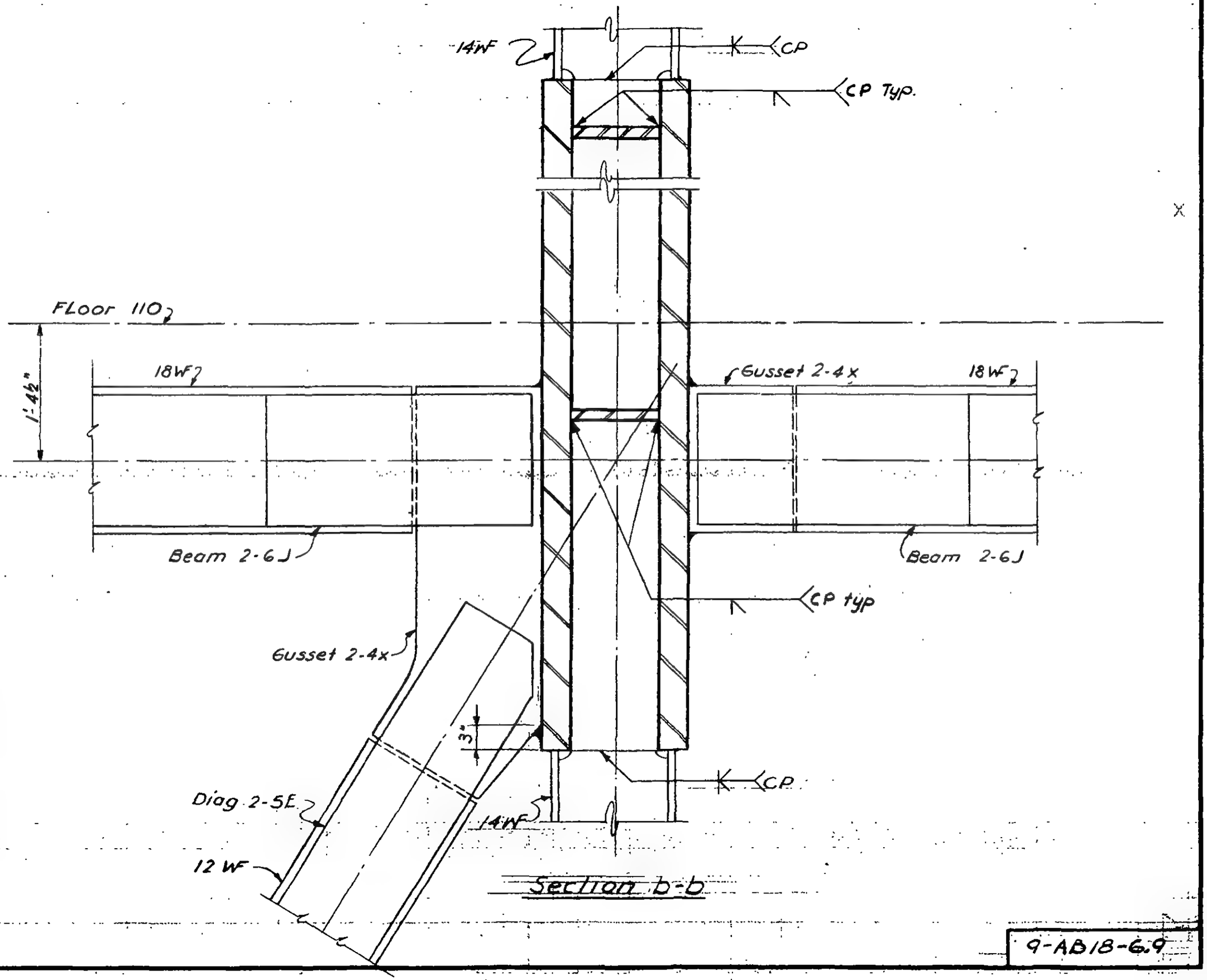

Section b-b

LICENSED PROFESSIONAL ENGINEER
LESLIE E. ROBERTSON
No. 34360
UNIVERSITY OF THE STATE OF NEW YORK

36

DESIGNED

DRAWN F. Smith

REVIEWED

9-AB18-6.9

SKILLING, HELLE, CHRISTIANSEN, ROBERTSON — Structural & Civil Engineers

PROJECT THE WORLD TRADE CENTER | TITLE FL. 107 - PH. CONNECTION DETAILS - LINES 04 & 05 | DATE 7-8-70

REVISIONS

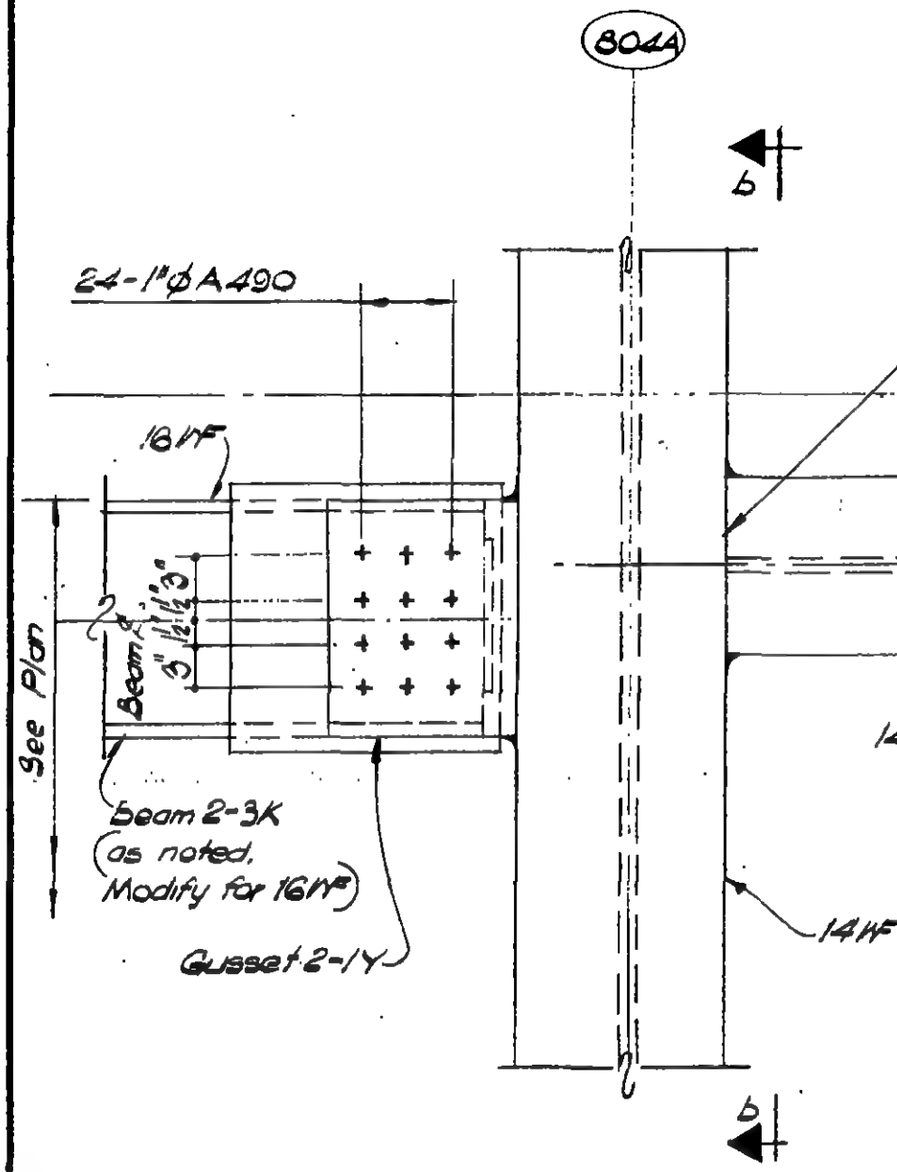

Section a-a
DETAIL 18-6G

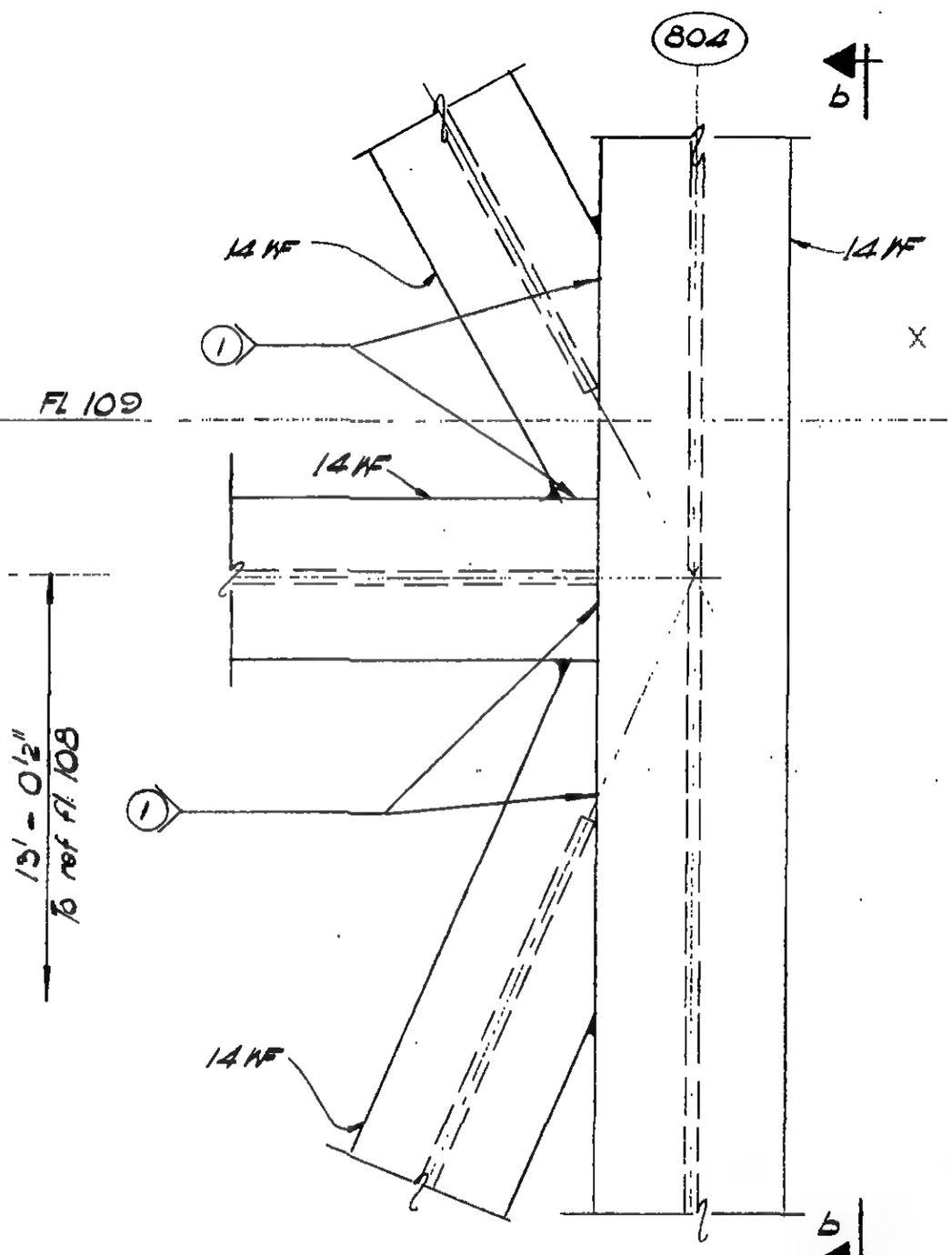

Section a-a
DETAIL 18-6H

LICENSED PROFESSIONAL ENGINEER
LESLIE E. ROBERTSON
No. 34860
UNIVERSITY OF THE STATE OF NEW YORK

DESIGNED A. Patel
DRAWN N. Clarke
REVIEWED E. Dracos

9-AB 18-6.14

SKILLING, HELLE, CHRISTIANSEN, ROBERTSON — Structural & Civil Engineers

PROJECT THE WORLD TRADE CENTER | TITLE FL. 107 - PH CONNECTION DETAILS - LINES 04&05 | DATE 7 - 8 - 70

REVISIONS

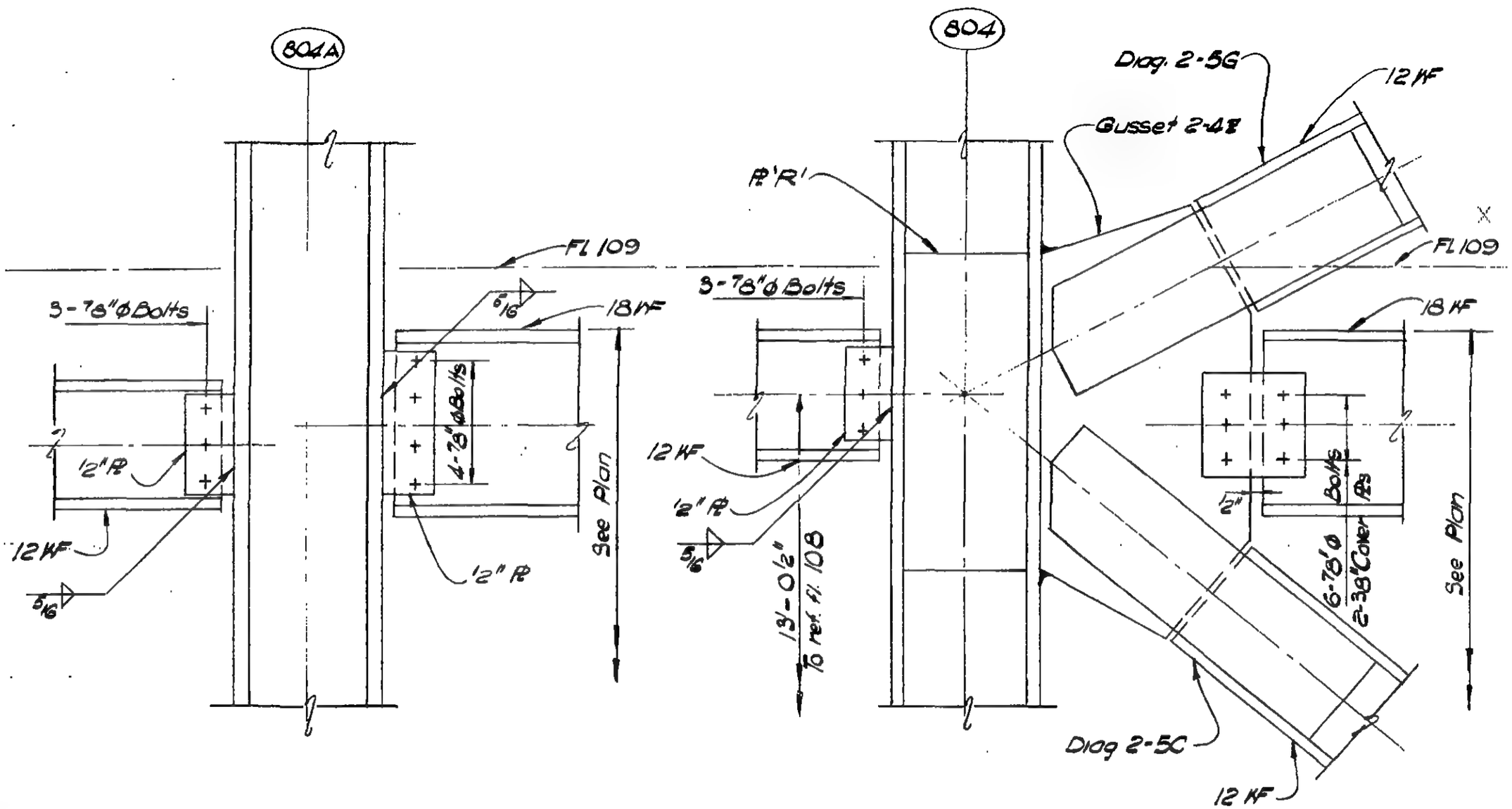

Section b - b

LICENSED PROFESSIONAL ENGINEER — LESLIE E. ROBERTSON — No. 34960 — UNIVERSITY OF THE STATE OF NEW YORK

DESIGNED A. Patel

DRAWN W. Clarke

REVIEWED E. Drakos

9-AB18-6.15

SKILLING, HELLE, CHRISTIANSEN, ROBERTSON — Structural & Civil Engineers

PROJECT THE WORLD TRADE CENTER | TITLE FLOOR 107-PH CONNECTION DETAILS-LINES 04 & 05 | DATE 6-22-70

REVISIONS

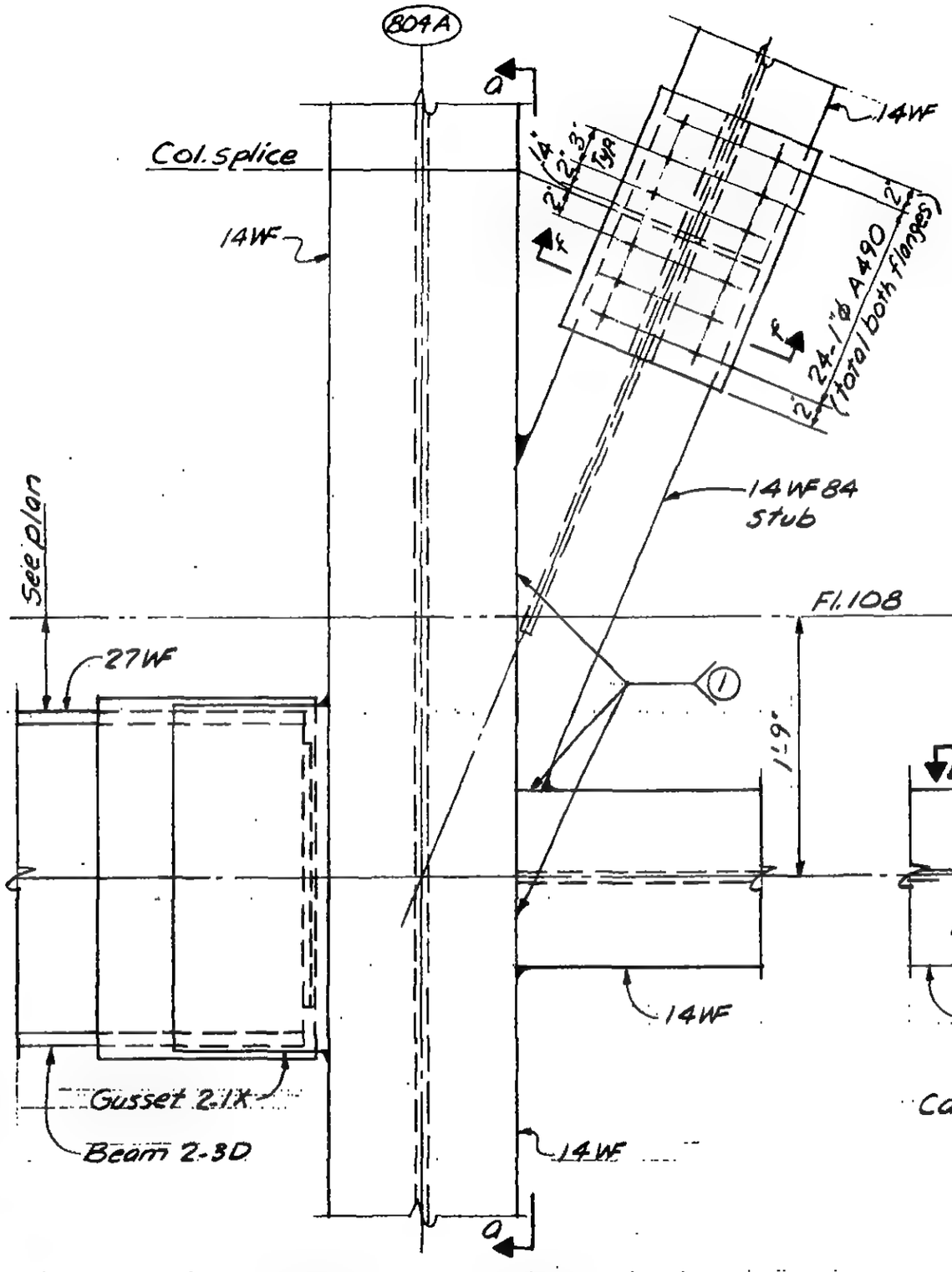

Detail 18-6J

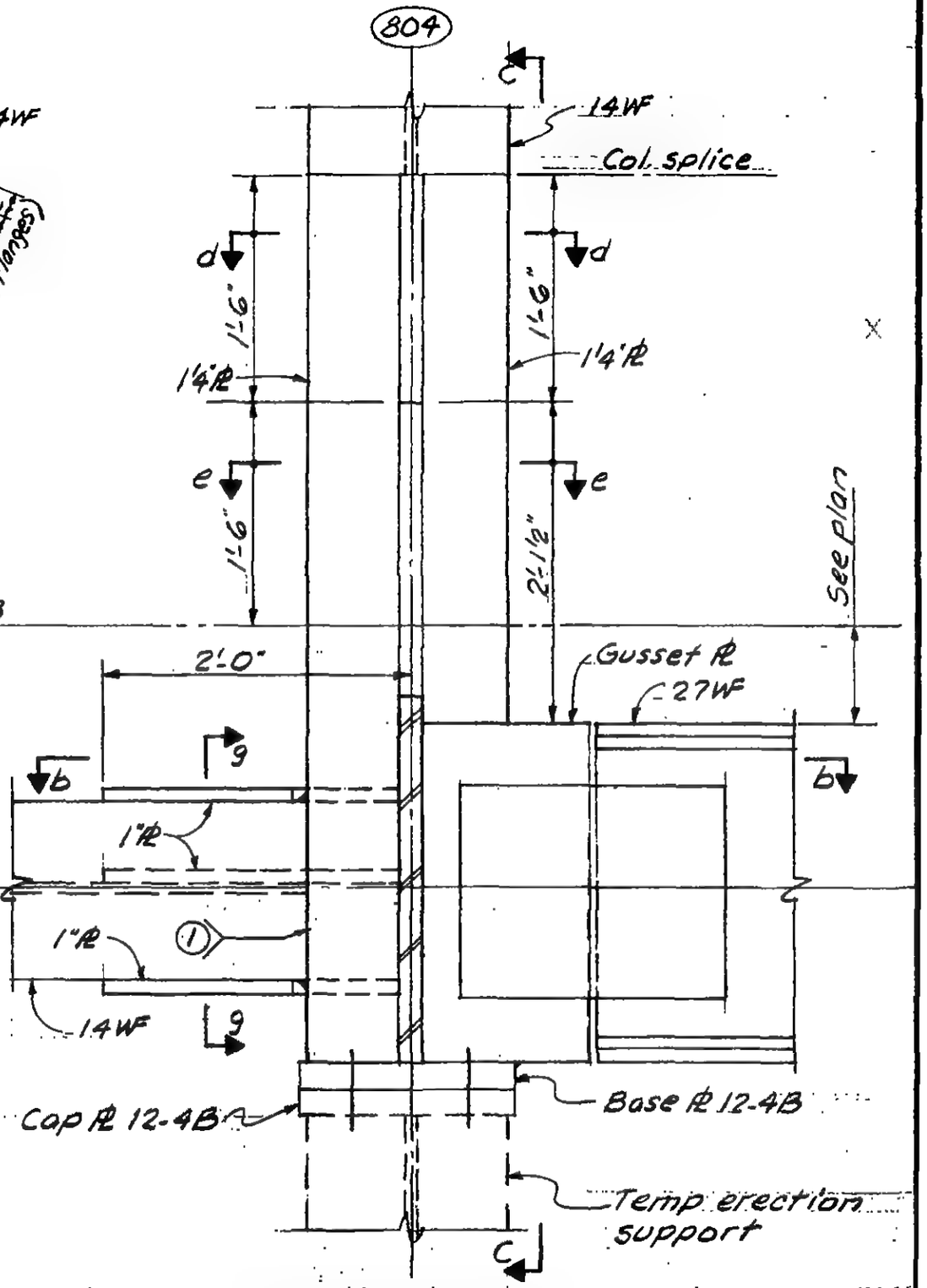

Detail 18-6K

LICENSED PROFESSIONAL ENGINEER — LESLIE E. ROBERTSON — No. 34360 — UNIVERSITY OF THE STATE OF NEW YORK

DESIGNED

DRAWN A. FRANQUI

REVIEWED

9-AB18-6.76

SKILLING, HELLE, CHRISTIANSEN, ROBERTSON — Structural & Civil Engineers

PROJECT: THE WORLD TRADE CENTER | TITLE: FL 107-PH CONNECTION DETAILS - LINES 04 & 05 | DATE: 6-22-70

REVISIONS

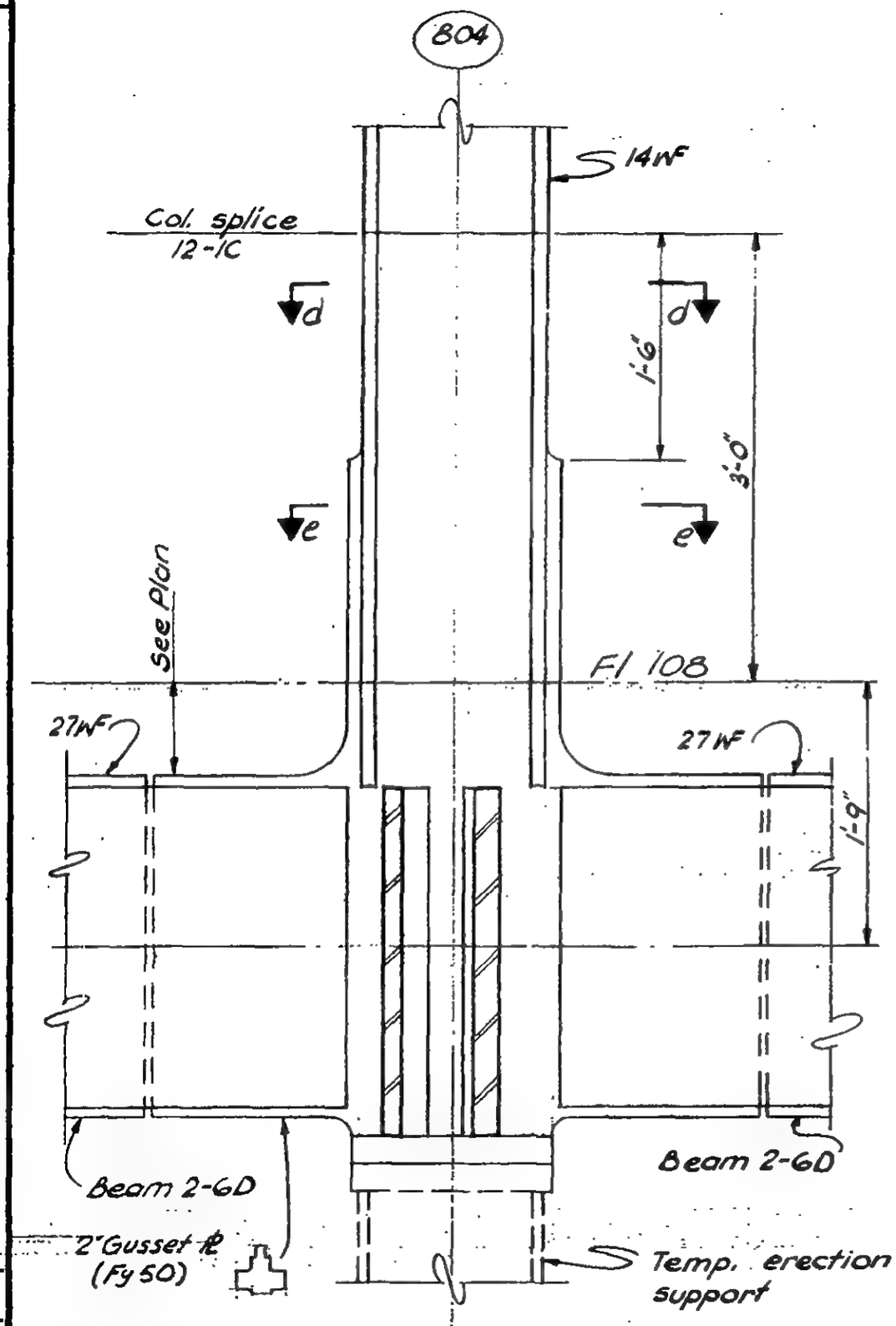

Section C-C

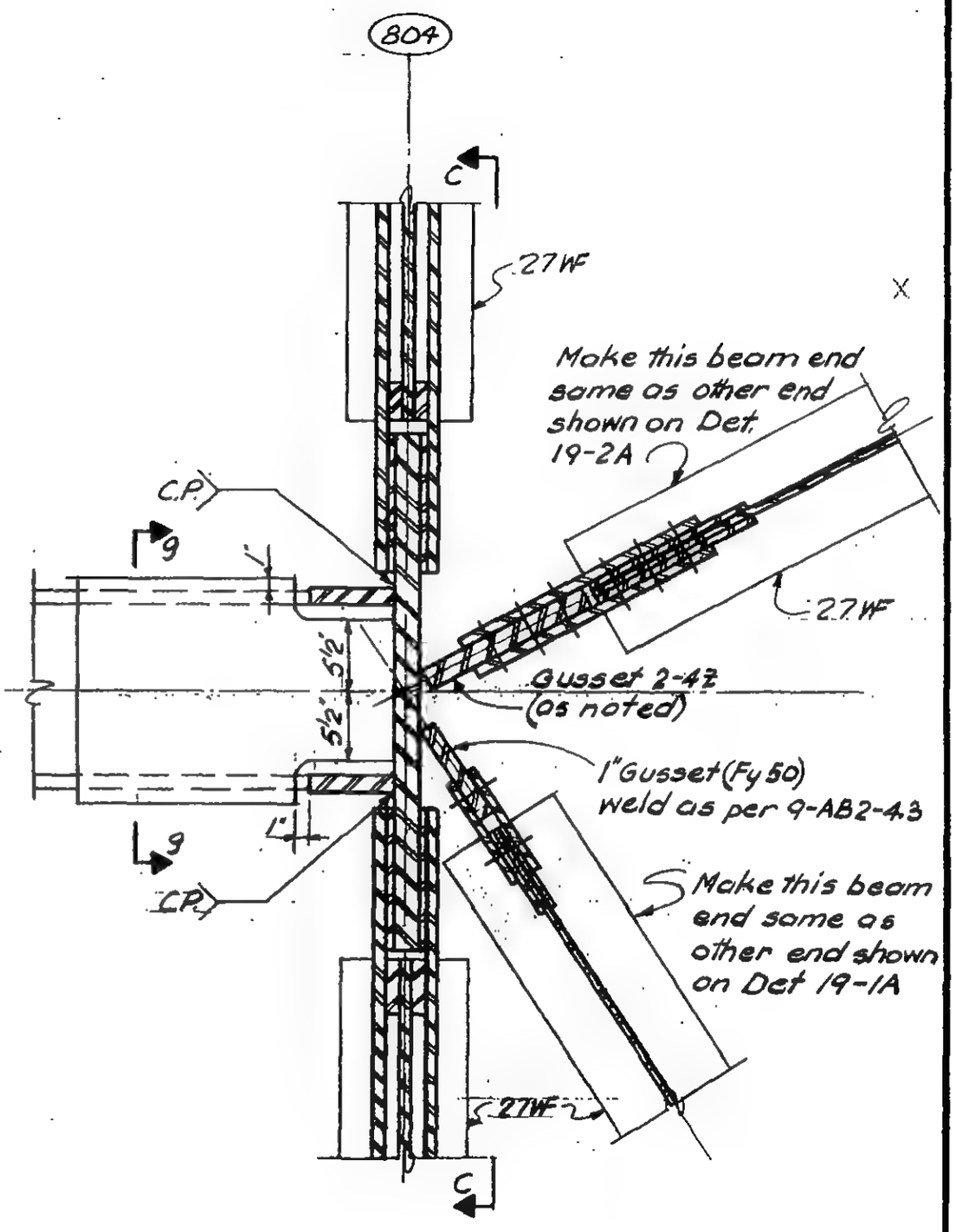

Section b-b

LICENSED PROFESSIONAL ENGINEER — LESLIE E. ROBERTSON — No. 34360 — UNIVERSITY OF THE STATE OF NEW YORK

DESIGNED

DRAWN: D. Huggins

REVIEWED

9-AB18-6.17

SKILLING, HELLE, CHRISTIANSEN, ROBERTSON — Structural & Civil Engineers

PROJECT: THE WORLD TRADE CENTER | TITLE: FL 107 - PH CONNECTION DETAILS - LINES 04 & 05 | DATE: 6-22-70

REVISIONS

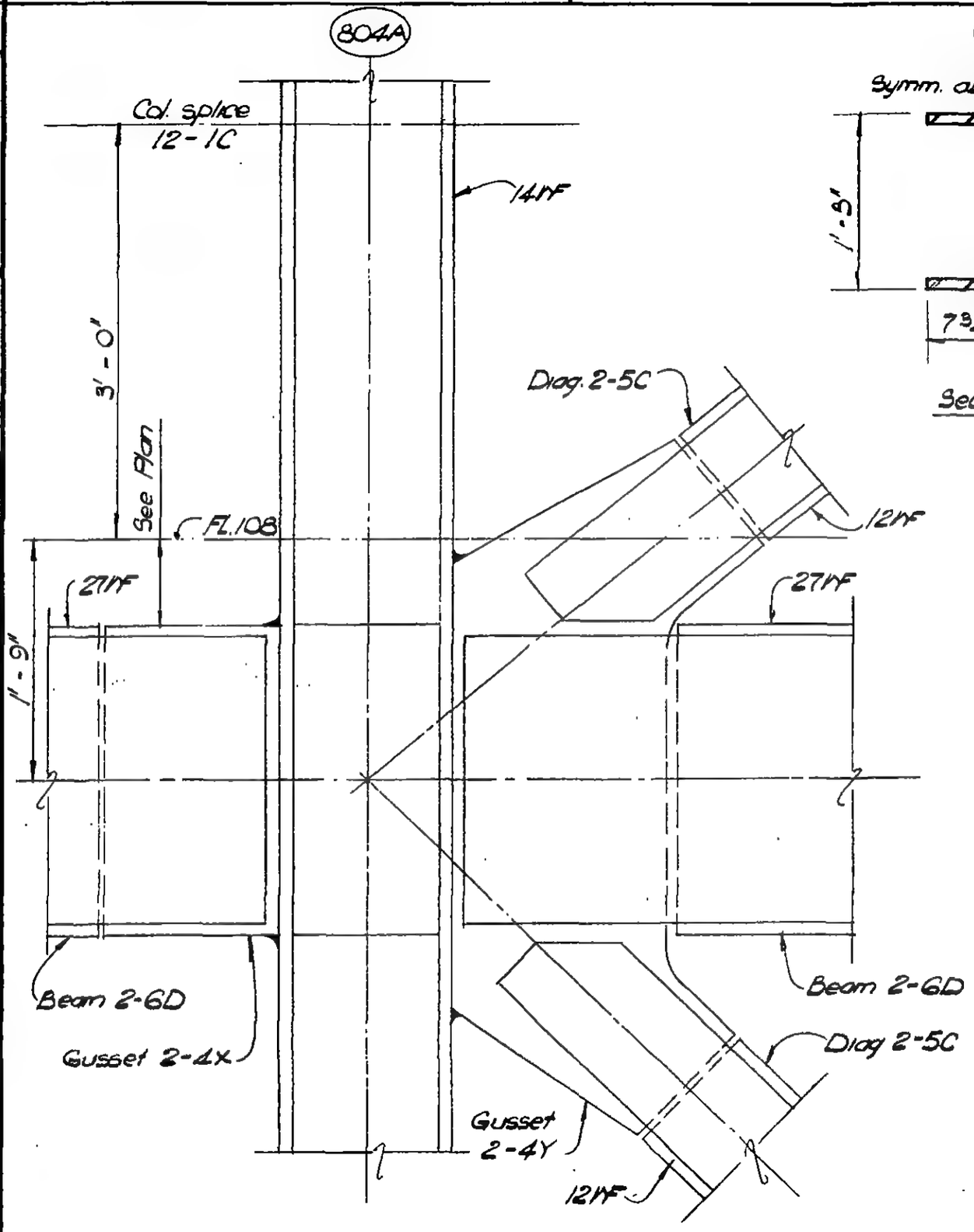

Section a-a

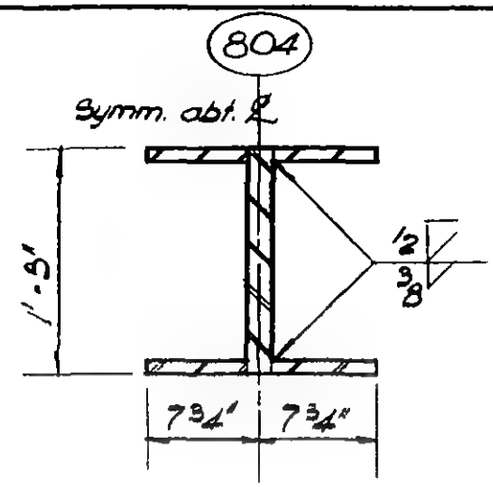

Section d-d

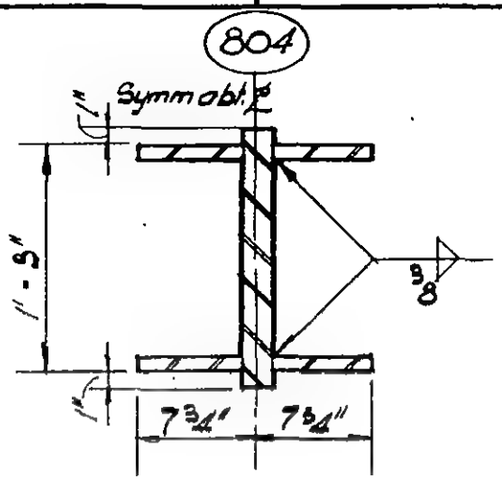

Section e-e

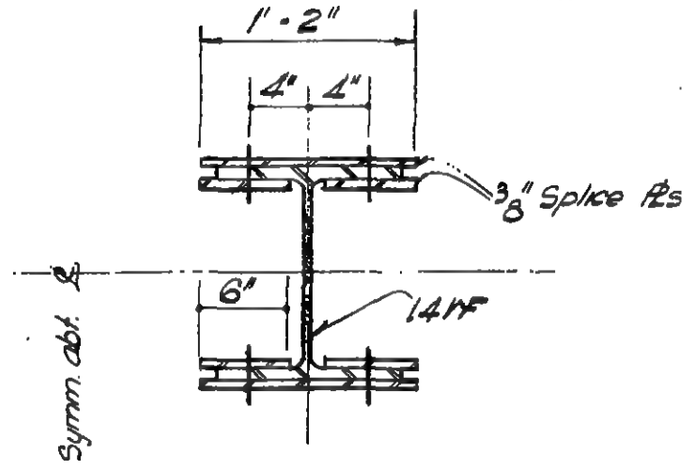

Section f-f

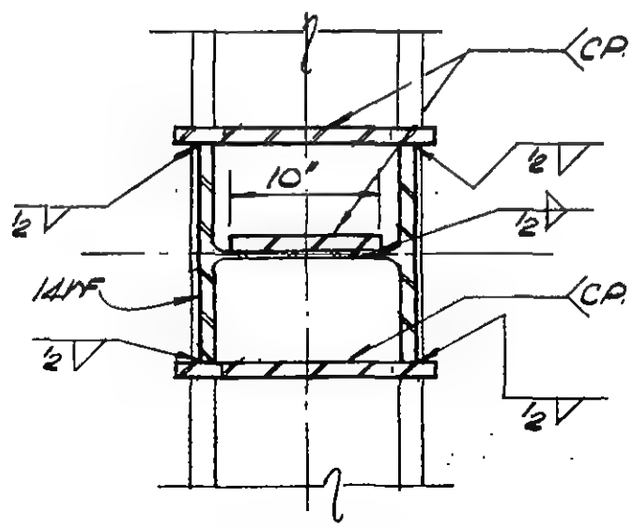

Section g-g

LICENSED PROFESSIONAL ENGINEER — LESLIE E. ROBERTSON — No. 34960 — UNIVERSITY OF THE STATE OF NEW YORK

DESIGNED

DRAWN: W. Clarke

REVIEWED

9-AB18-6.18

SKILLING, HELLE, CHRISTIANSEN, ROBERTSON — Structural & Civil Engineers

PROJECT THE WORLD TRADE CENTER | TITLE FL. 107 - PH. CONNECTION DETAILS - LINES 04 & 05 | DATE 6/22/70

REVISIONS

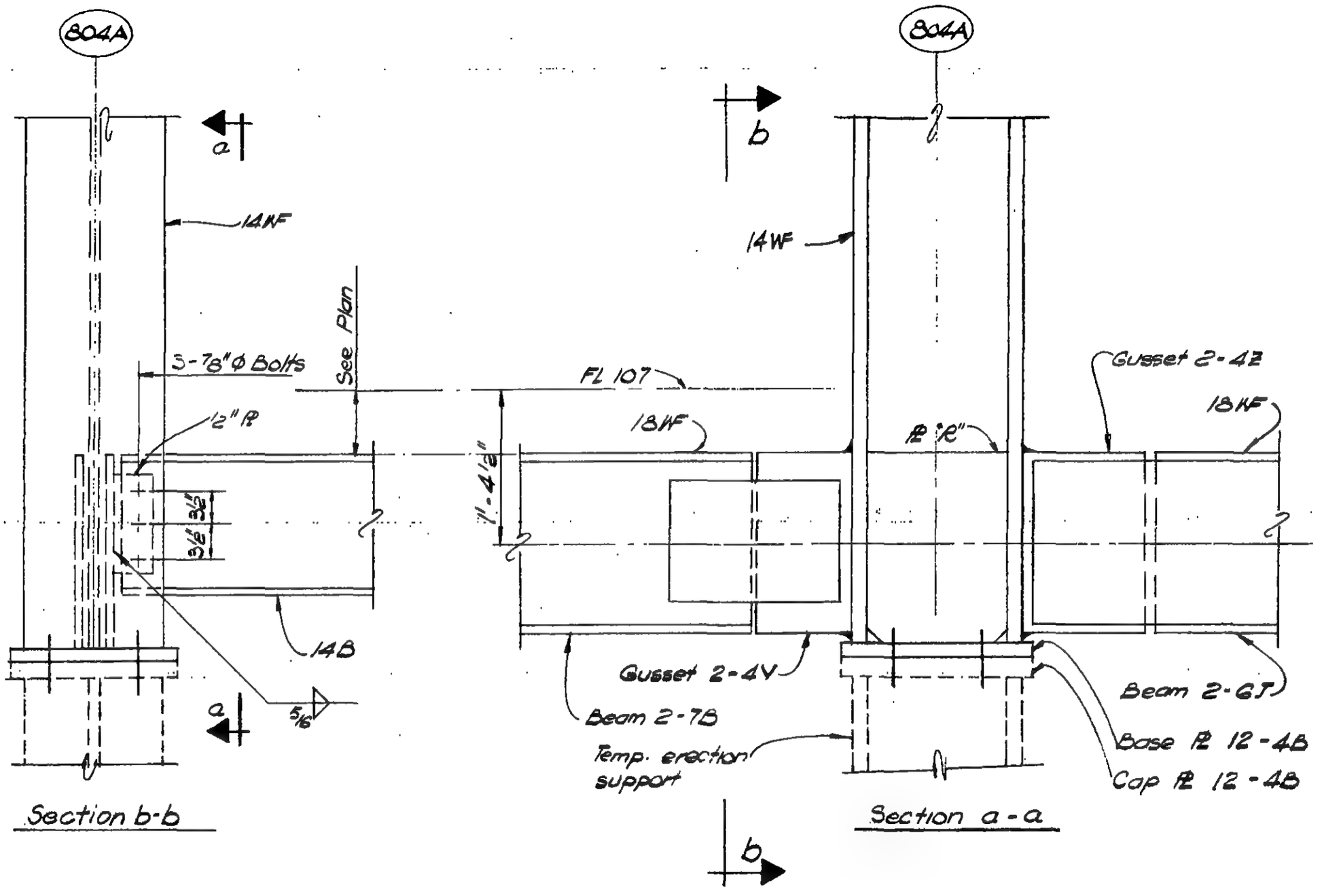

Detail 18-6M

LICENSED PROFESSIONAL ENGINEER LESLIE E. ROBERTSON No. 34360 UNIVERSITY OF THE STATE OF NEW YORK

DESIGNED A. Potel

DRAWN W. Clarke

REVIEWED

9AB18-6.19

SKILLING, HELLE, CHRISTIANSEN, ROBERTSON — Structural & Civil Engineers

PROJECT THE WORLD TRADE CENTER | TITLE PL 107 - PH CONNECTION DETAILS - LINES 0044005 | DATE 10-12-70

REVISIONS

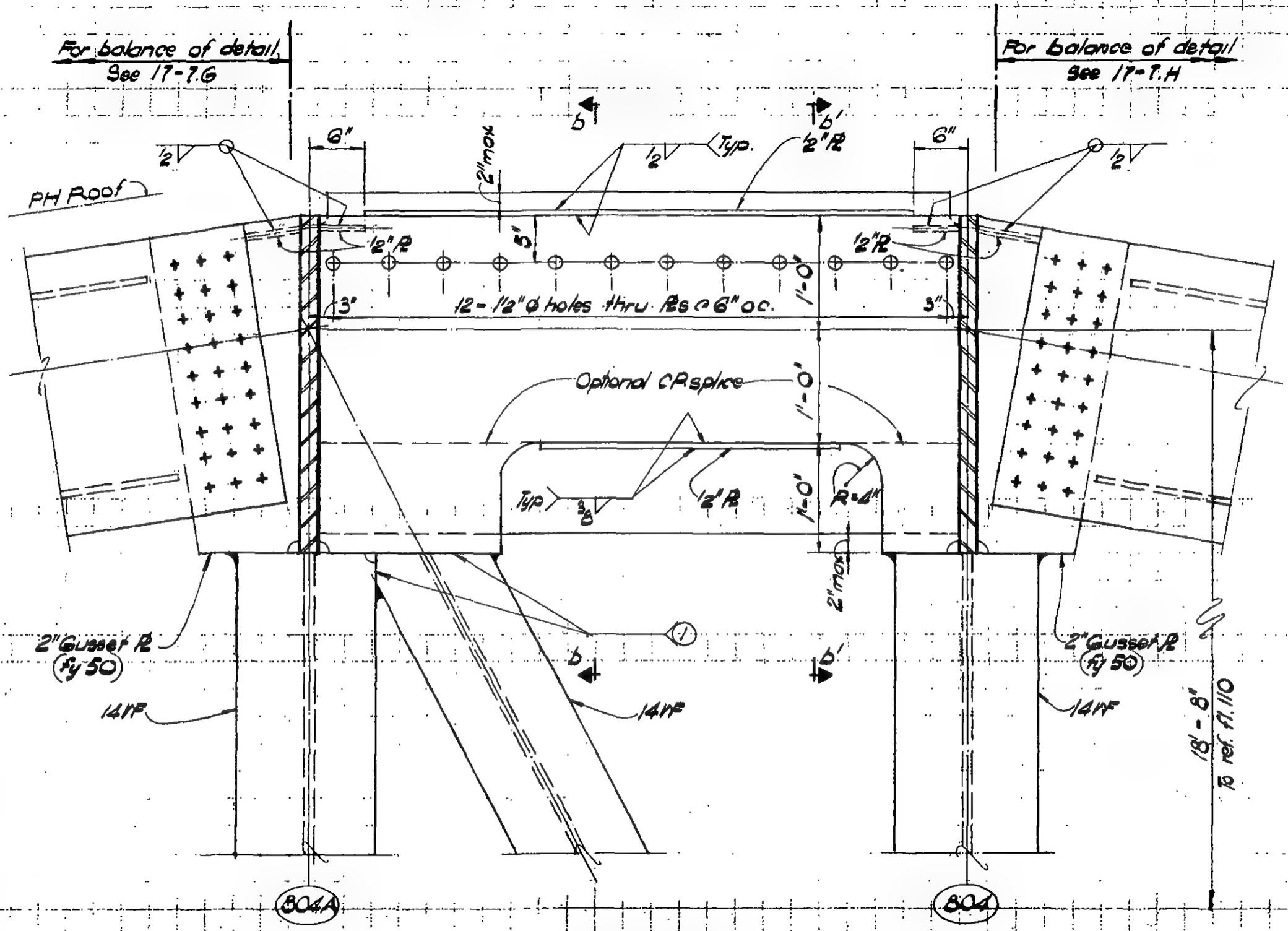

DETAIL 18-6P

DETAIL 18-6Q

DESIGNED

DRAWN M. Clarke

REVIEWED

LICENSED PROFESSIONAL ENGINEER — LESLIE E. ROBERTSON — No 34960 — UNIVERSITY OF THE STATE OF NEW YORK

9-8/8-6.30

SKILLING, HELLE, CHRISTIANSEN, ROBERTSON — Structural & Civil Engineers

PROJECT THE WORLD TRADE CENTER | TITLE FL 107 - RH CONNECTION DETAILS - LINES 004 & 005 | DATE 10-12-70

REVISIONS

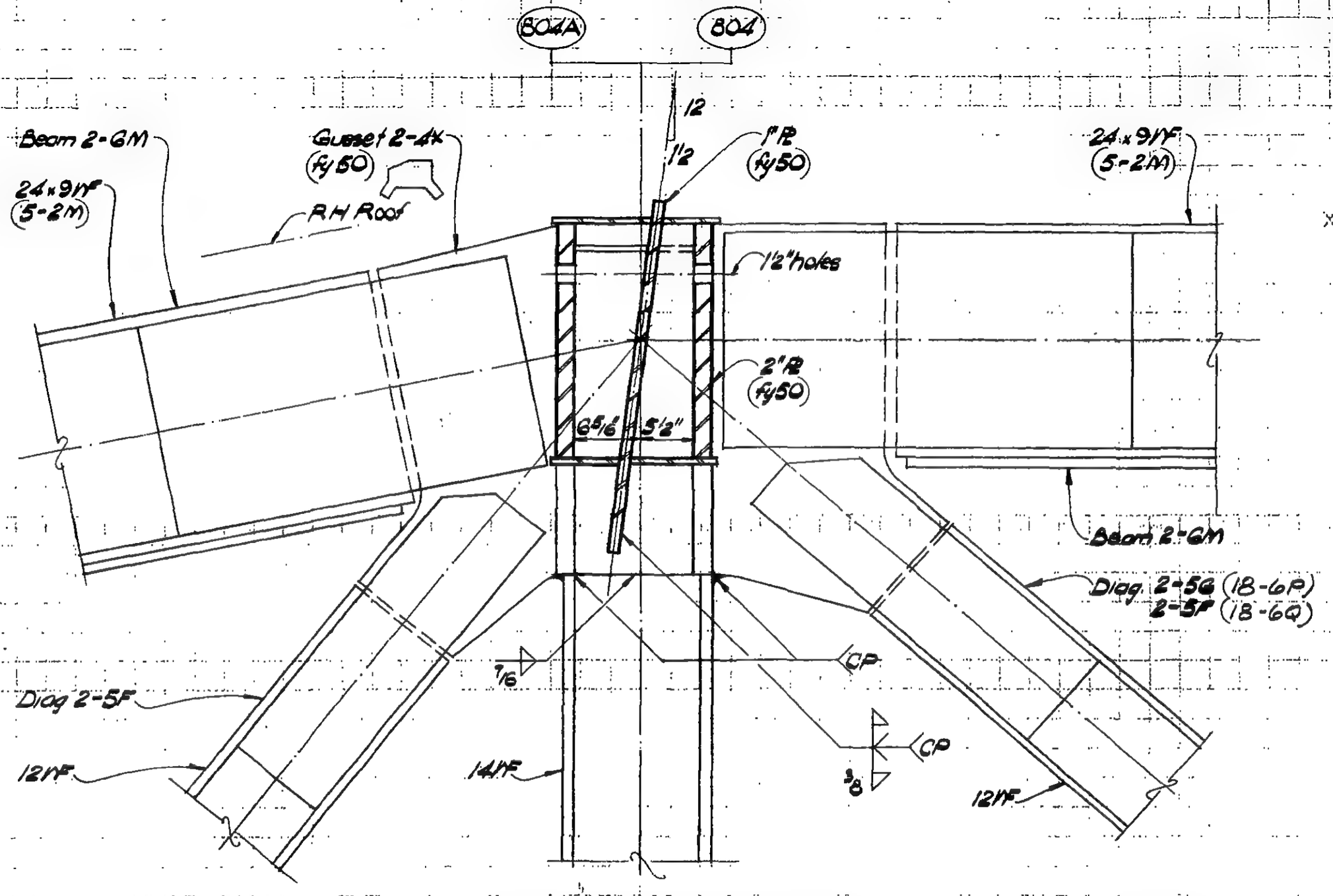

Section b-b (as shown)
Section b'-b' (opp hand)

LICENSED PROFESSIONAL ENGINEER — LESLIE E. ROBERTSON — No. 34360 — UNIVERSITY OF THE STATE OF NEW YORK

DESIGNED

DRAWN M. Clarke

REVIEWED

9-B/8-6.31

SKILLING, HELLE, CHRISTIANSEN, ROBERTSON — Structural & Civil Engineers

PROJECT THE WORLD TRADE CENTER | TITLE Fl 107 - PH CONNECTION DETAILS - Fl 108 | DATE 4-1-70

REVISIONS

5-27-70

7-15-70

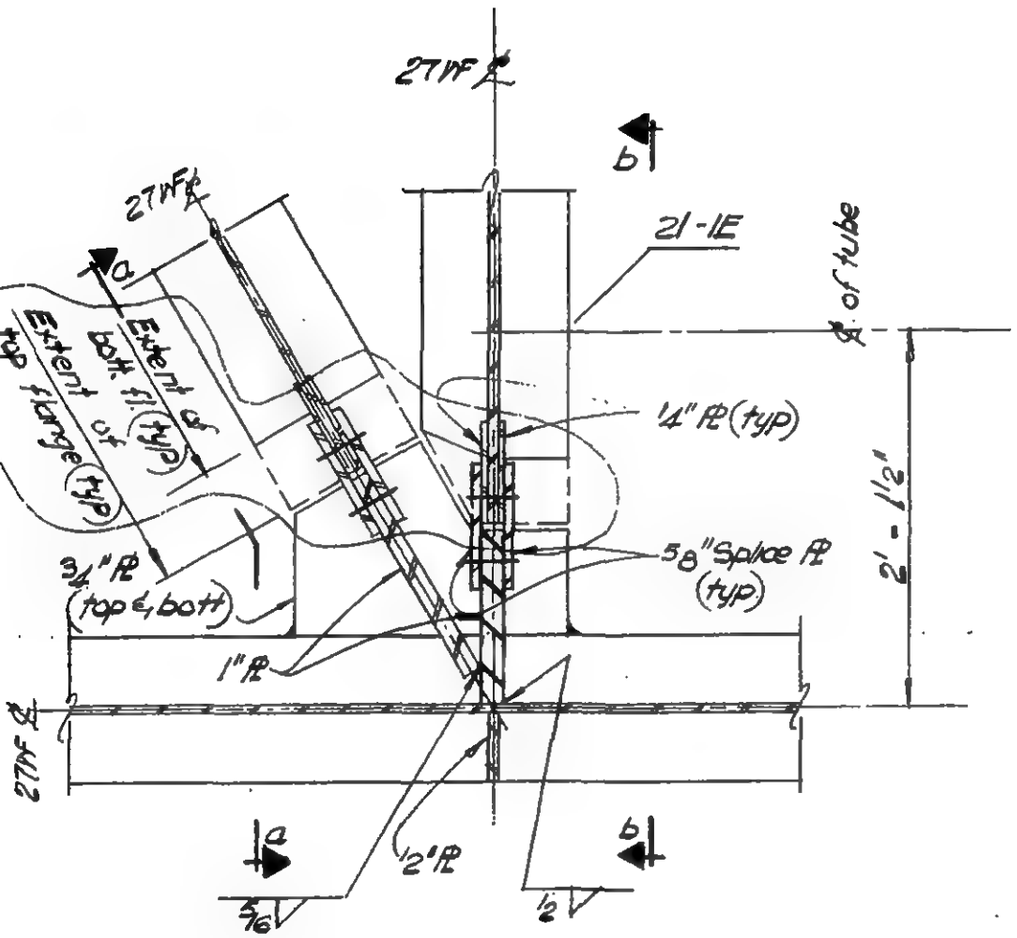

PLAN

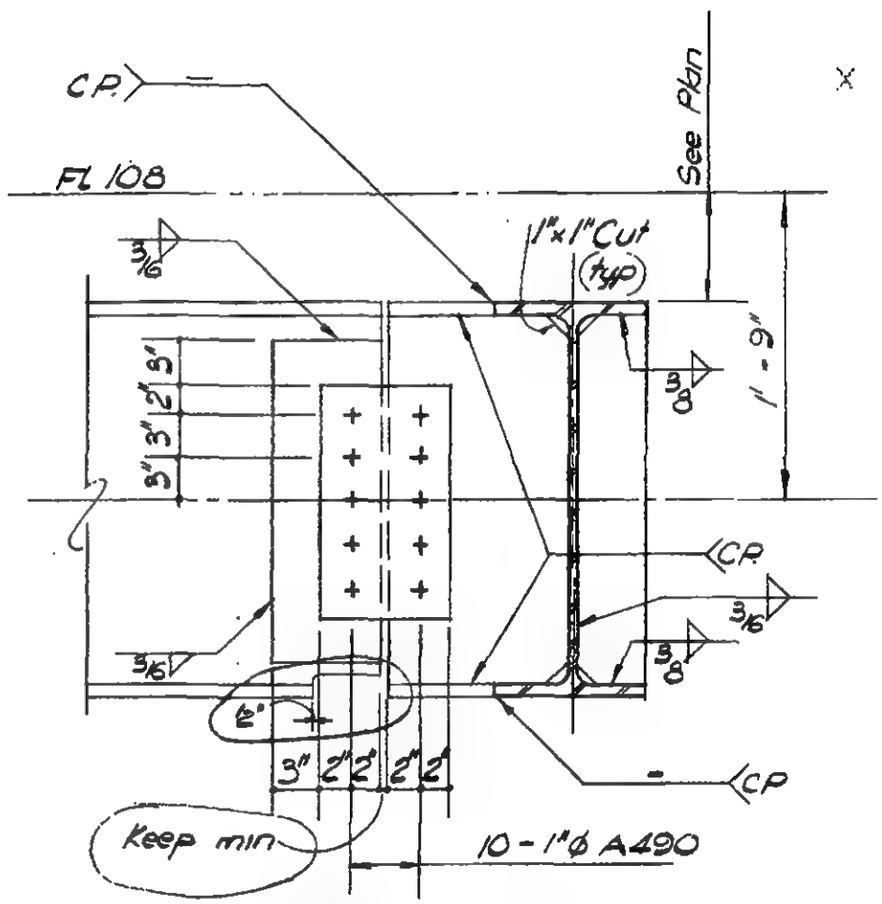

Section a-a (as shown)
Section b-b (opp. hand)

DETAIL 19-1A

LICENSED PROFESSIONAL ENGINEER — LESLIE E. ROBERTSON — No. 34360 — UNIVERSITY OF THE STATE OF NEW YORK

DESIGNED L. Quirke

DRAWN W. Clarke

REVIEWED E. Dracos

9-AB19-1.1

SKILLING, HELLE, CHRISTIANSEN, ROBERTSON — Structural & Civil Engineers

PROJECT: THE WORLD TRADE CENTER | TITLE: FL 107-PH CONNECTION DETAILS- FL 108 | DATE: 4-1-70

REVISIONS

5-27-70

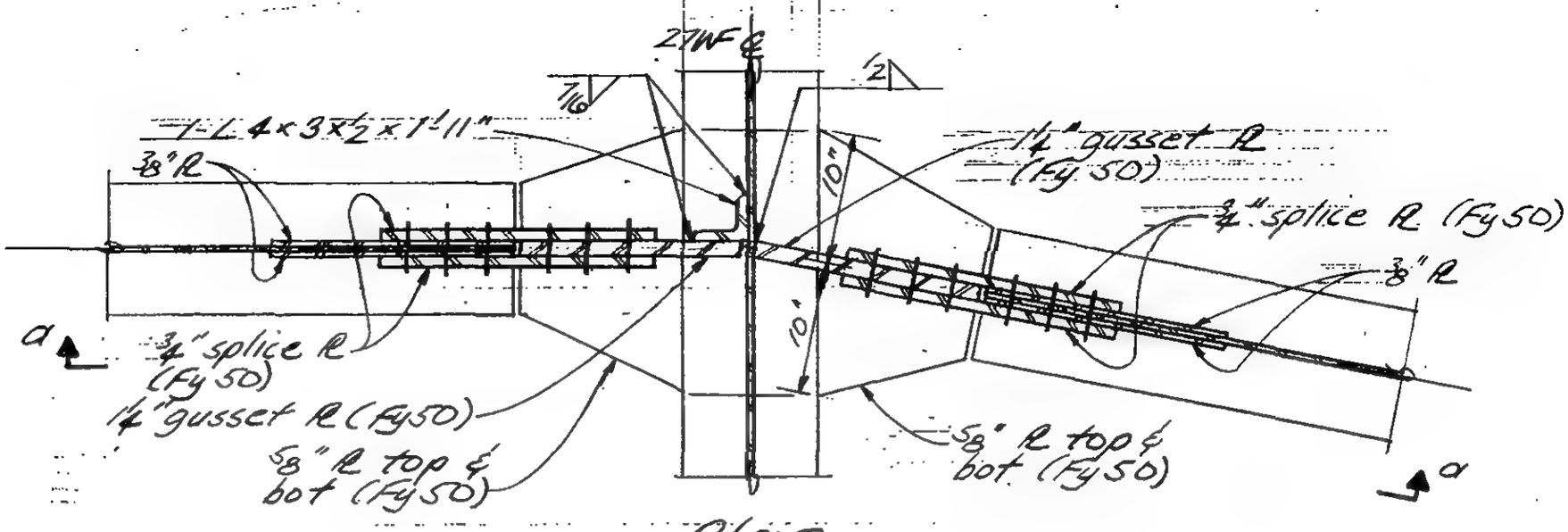

Plan

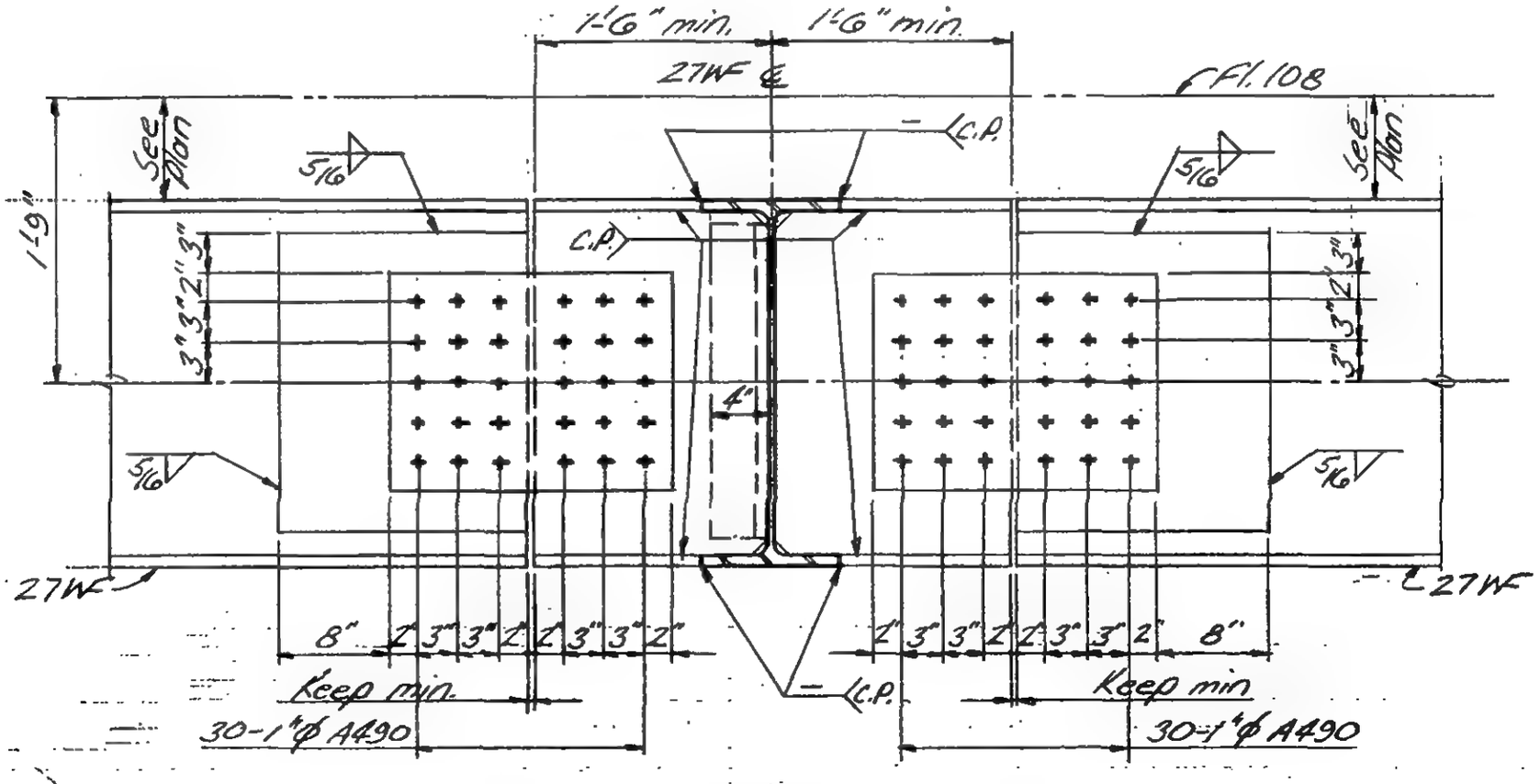

Section a-a

Detail 19-1B

LICENSED PROFESSIONAL ENGINEER — LESLIE E. ROBERTSON — No. 34360 — UNIVERSITY OF THE STATE OF NEW YORK

DESIGNED: L. Quirko

DRAWN: J. Adams

REVIEWED: E. Drakos

9-AB19-1.2

SKILLING, HELLE, CHRISTIANSEN, ROBERTSON — Structural & Civil Engineers

PROJECT: THE WORLD TRADE CENTER

TITLE: FL 107 - PH CONNECTION DETAILS - FL 108

DATE: 4 - 1 - 70

REVISIONS

5-27-70

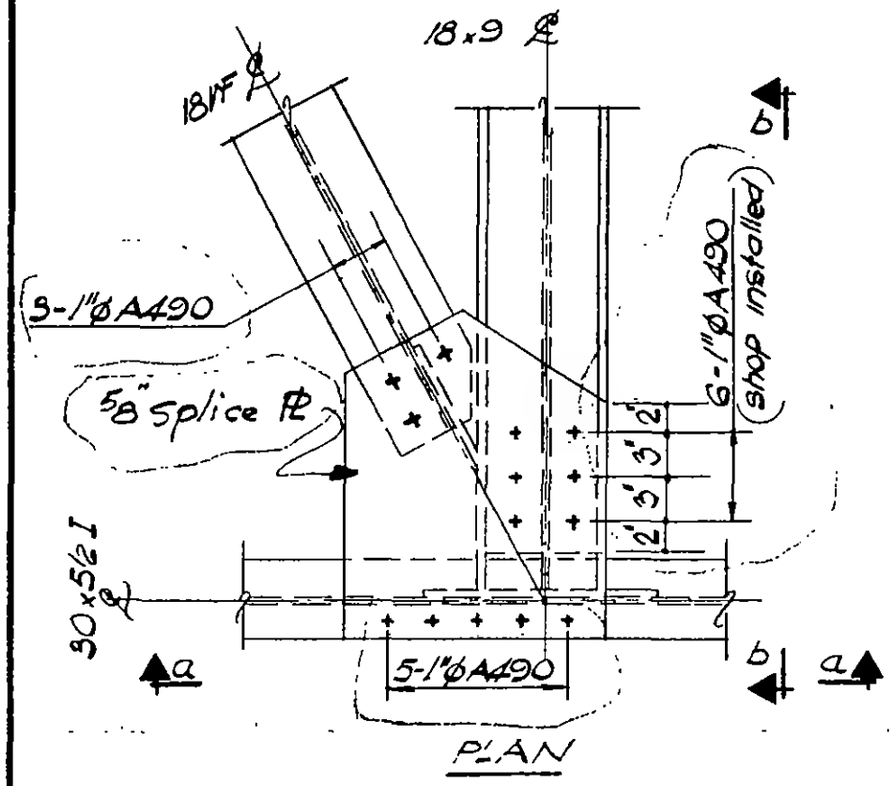

PLAN

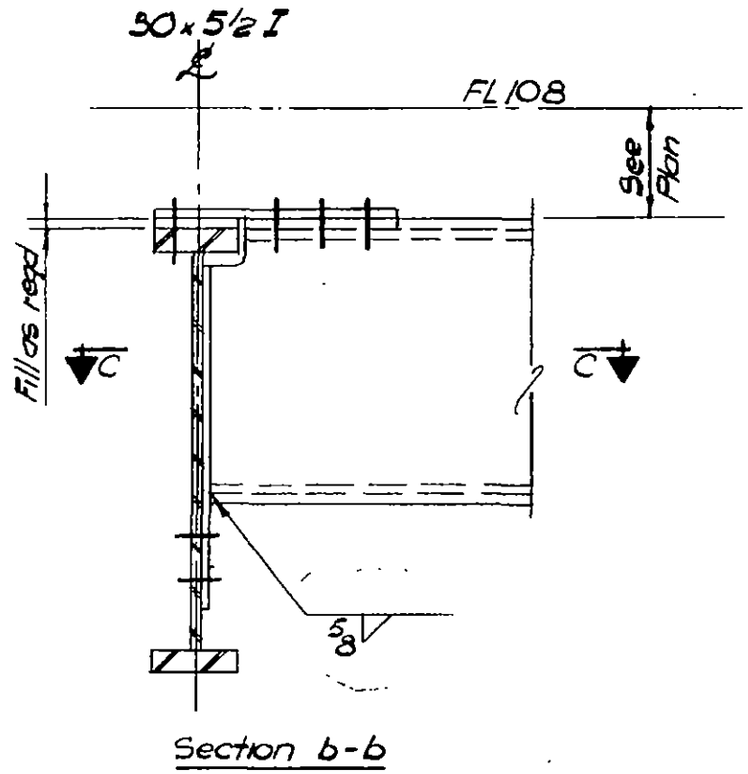

Section b-b

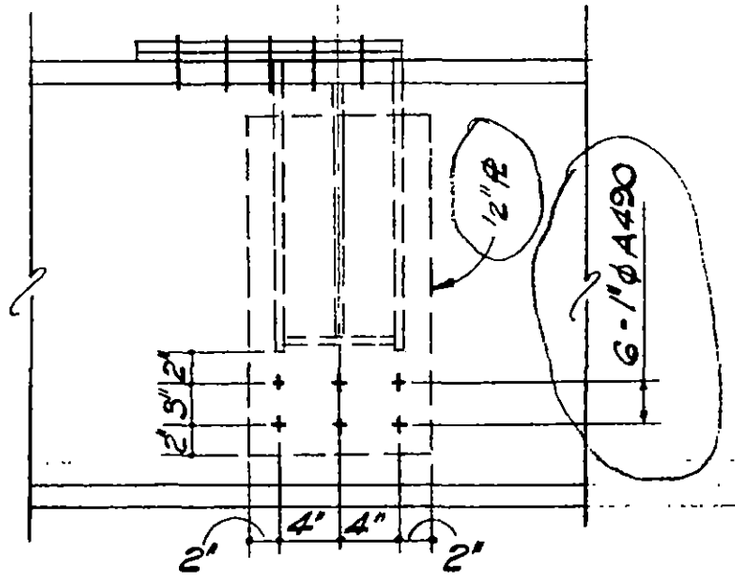

Section a-a

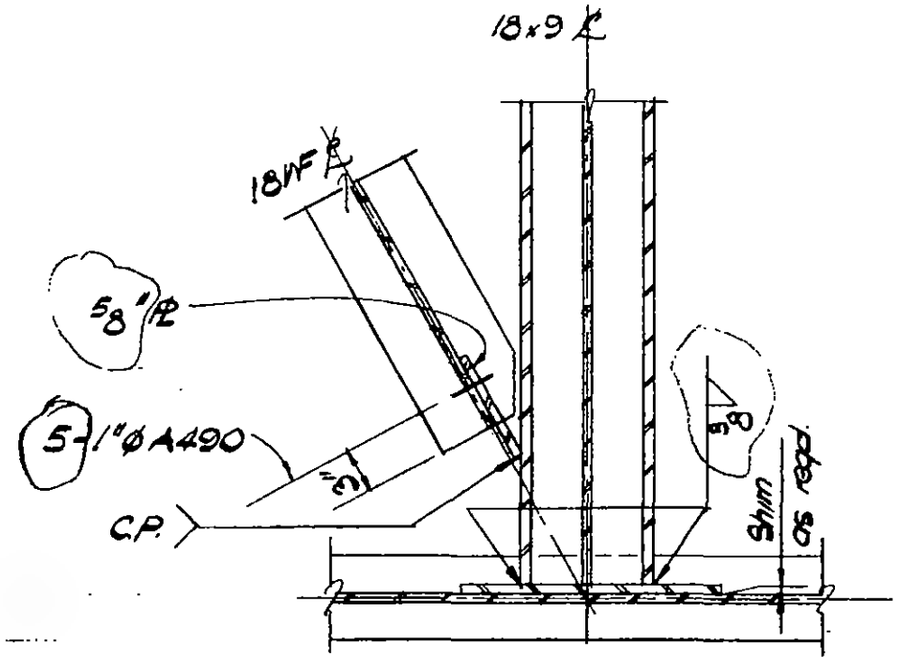

Section c-c

DETAIL 19 - 1C

9-AB19-1.3

LICENSED PROFESSIONAL ENGINEER — LESLIE E. ROBERTSON — No. 34960 — UNIVERSITY OF THE STATE OF NEW YORK

DESIGNED: H Vom

DRAWN: N. Clarke

REVIEWED: E. Drakos

SKILLING, HELLE, CHRISTIANSEN, ROBERTSON — Structural & Civil Engineers

PROJECT: THE WORLD TRADE CENTER | TITLE: FL 107-PH CONNECTION DETAILS - FL 108 | DATE: 4-1-70

REVISIONS

5-27-70

7-15-70

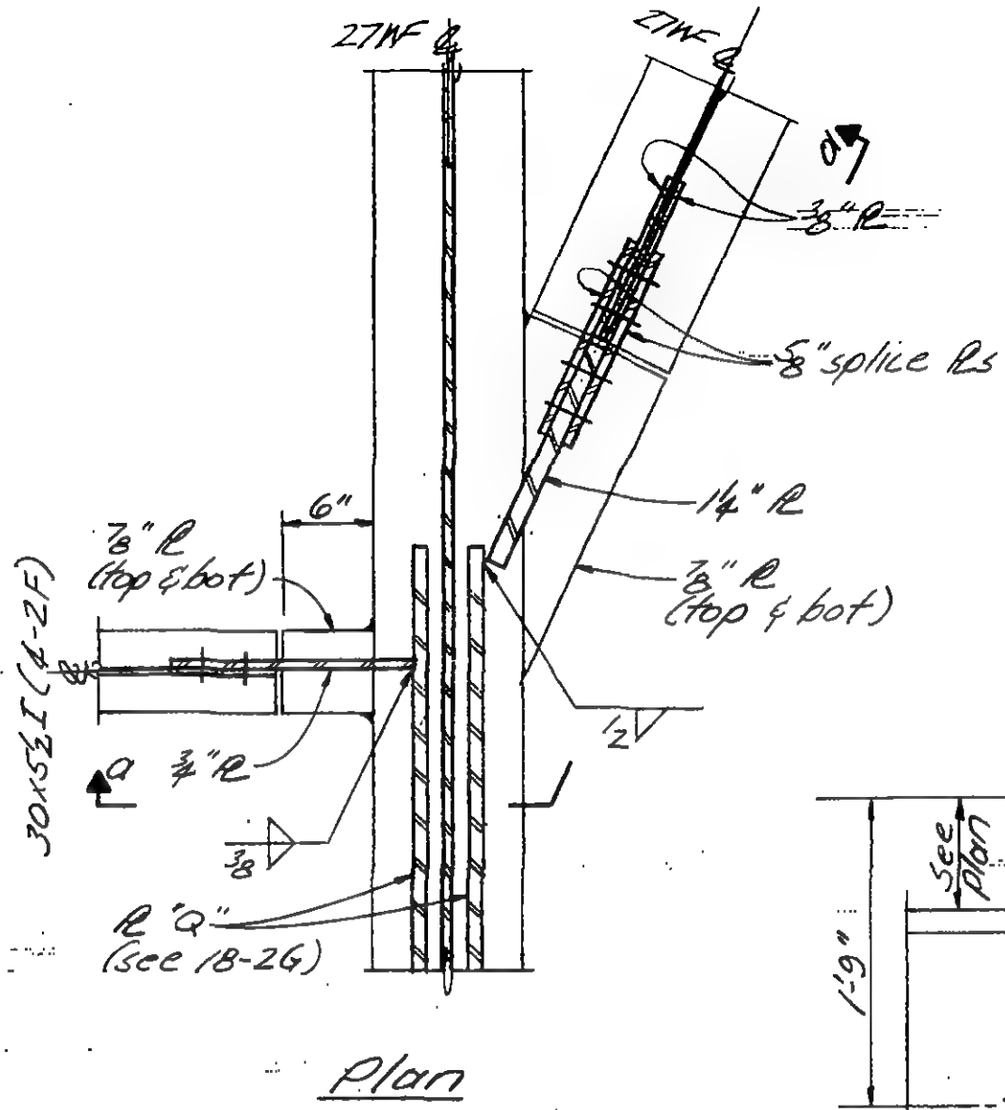

Plan

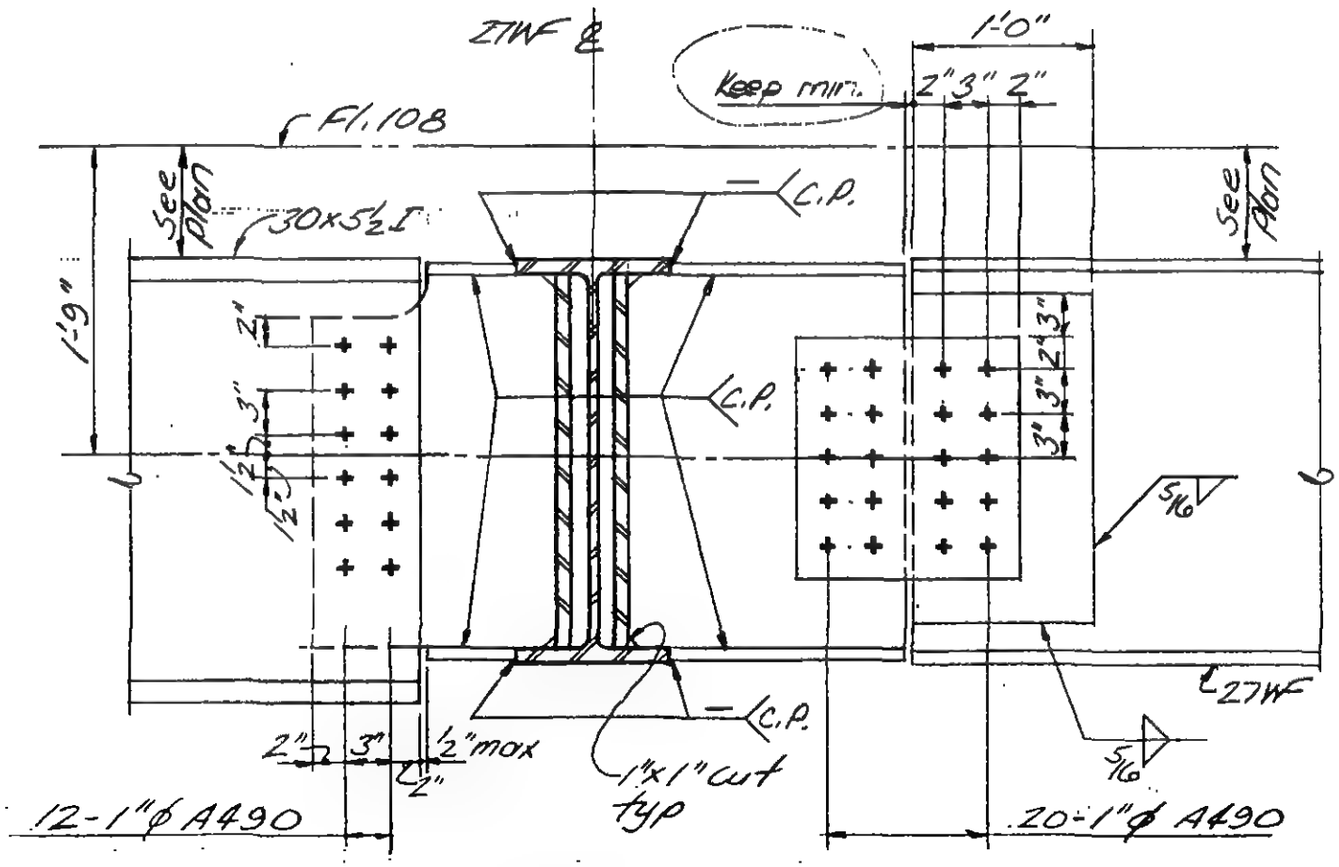

Section a-a

Detail 19-1D

LICENSED PROFESSIONAL ENGINEER — LESLIE E. ROBERTSON — No 34360 — UNIVERSITY OF THE STATE OF NEW YORK

DESIGNED L. Quirko

DRAWN J. Adams

REVIEWED E. Drakos

9-AB19-1.4

SKILLING, HELLE, CHRISTIANSEN, ROBERTSON — Structural & Civil Engineers

PROJECT: THE WORLD TRADE CENTER | TITLE: FL 107 - PH CONNECTION DETAILS - FL 108 | DATE: 4-1-70

REVISIONS

5-27-70

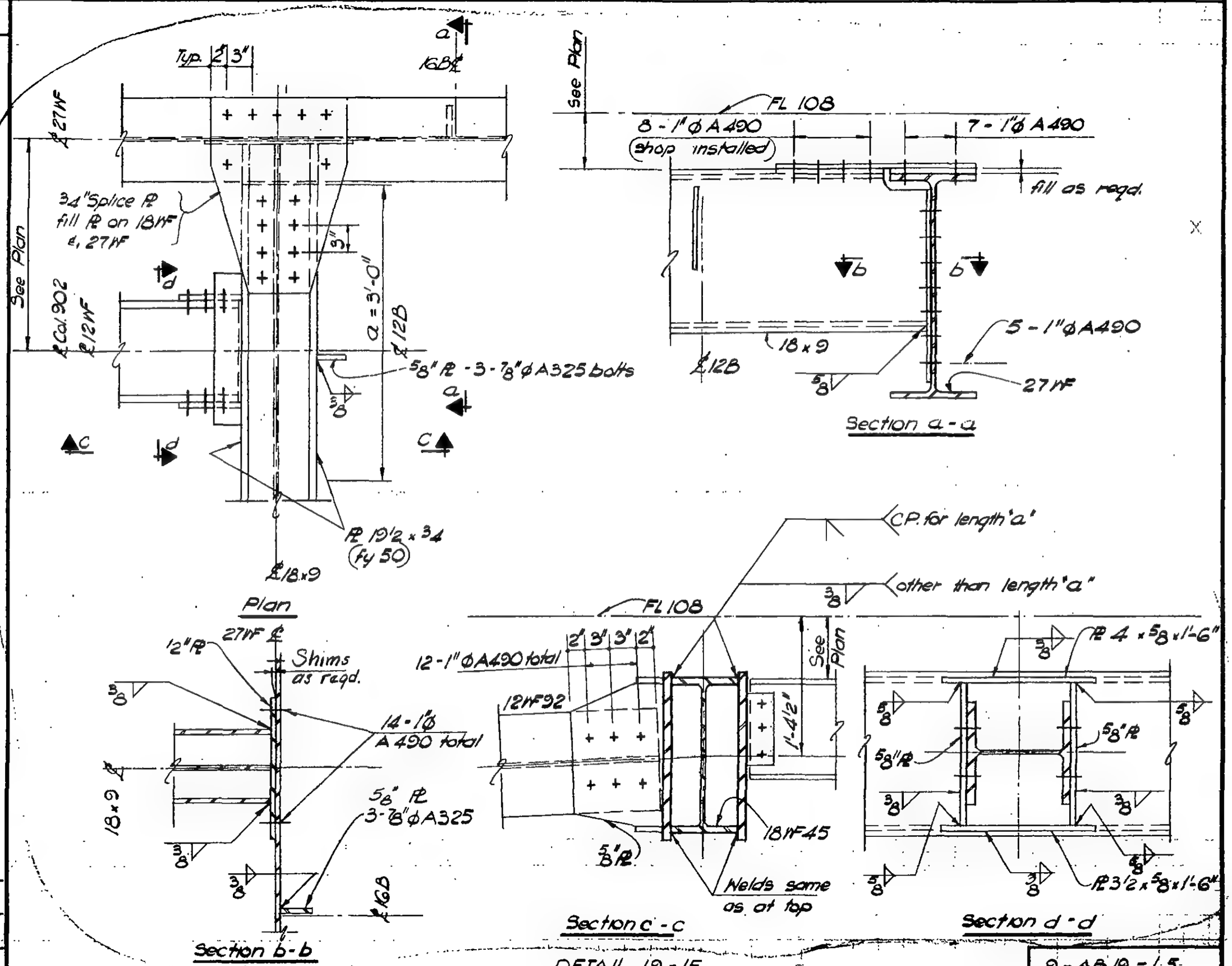

DETAIL 19-1E

9-AB19-1.5

LICENSED PROFESSIONAL ENGINEER — LESLIE E. ROBERTSON — No. 34360 — UNIVERSITY OF THE STATE OF NEW YORK

DESIGNED: H. Boss

DRAWN: W. Clarke

REVIEWED: E. Drakos

SKILLING, HELLE, CHRISTIANSEN, ROBERTSON — Structural & Civil Engineers

PROJECT: THE WORLD TRADE CENTER

TITLE: FL 107 - PH CONNECTION DETAILS - FL 108

DATE: 4 - 1 - 70

REVISIONS

5 - 27 - 70

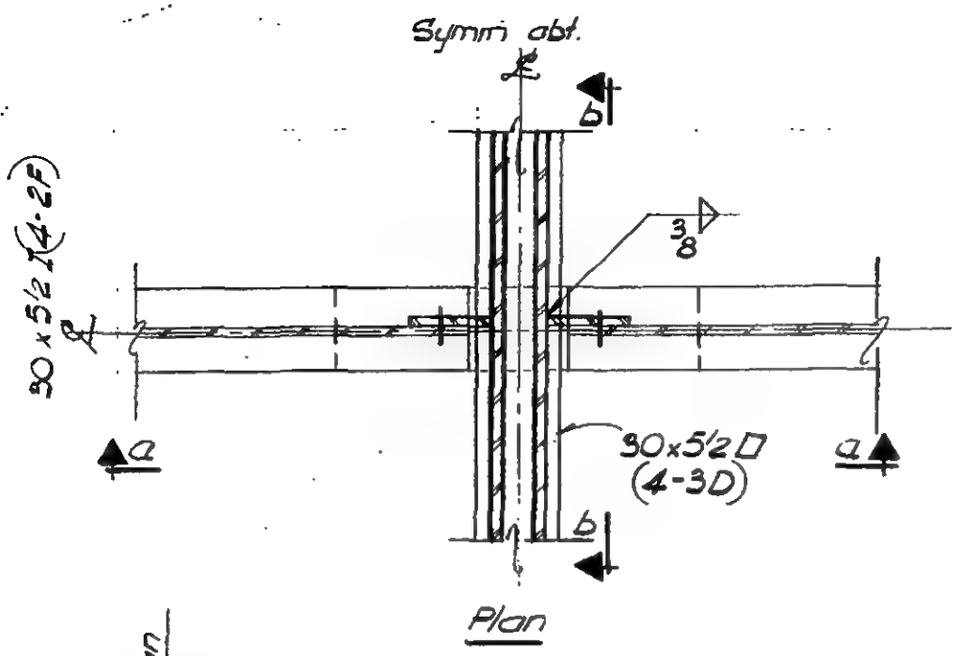

Plan

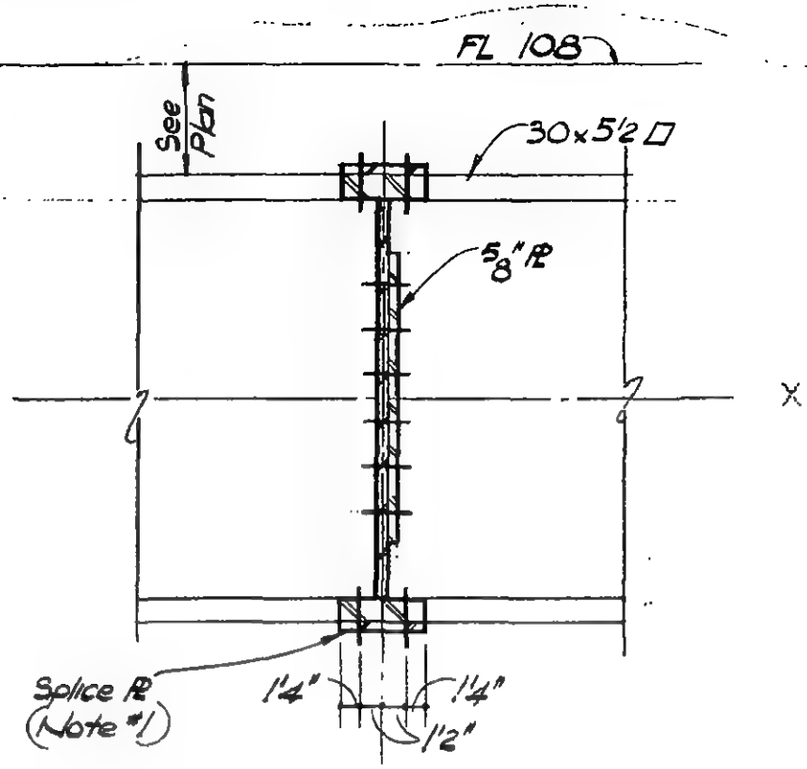

Section b - b

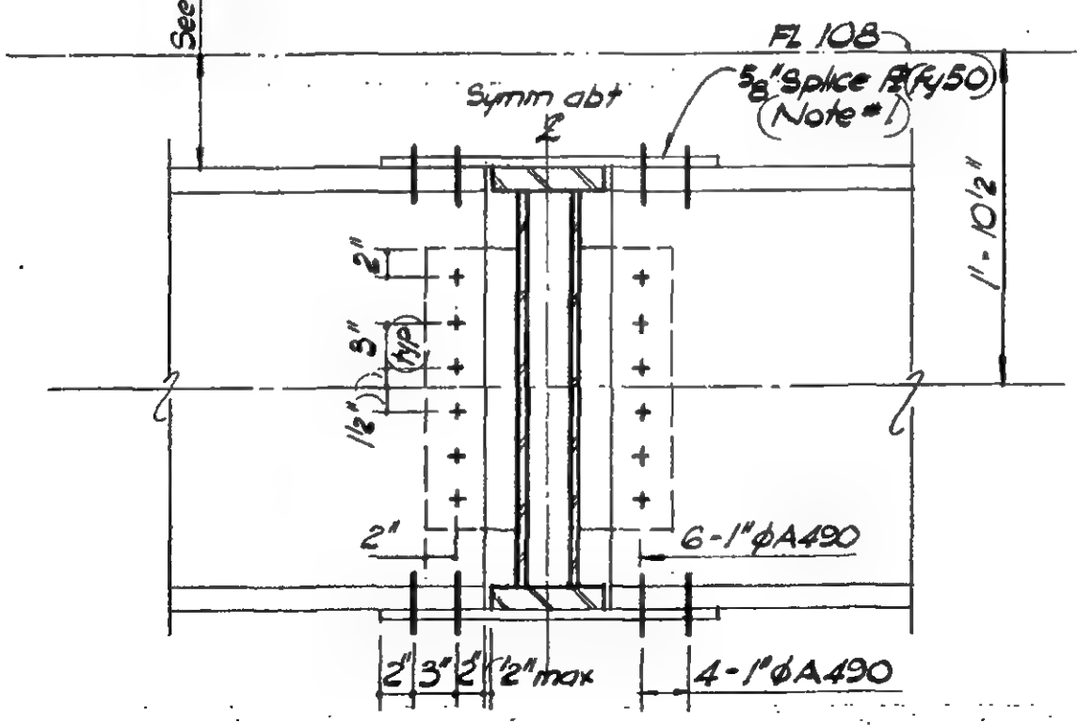

Section a - a

NOTES:

1. Splice PLs shall have holes 3/16" larger than nominal bolt diameter. In all other places, holes shall be 1/16" larger.

LICENSED PROFESSIONAL ENGINEER — LESLIE E. ROBERTSON — No. 34360 — UNIVERSITY OF THE STATE OF NEW YORK

DESIGNED: L. Quirko

DRAWN: W. Clarke

REVIEWED: E. Drakos

DETAIL 19 - 1F

9 - AB19 - 1.6

SKILLING, HELLE, CHRISTIANSEN, ROBERTSON — Structural & Civil Engineers

PROJECT: THE WORLD TRADE CENTER | TITLE: FL 107-PH CONNECTION DETAILS - FL 108 | DATE: 4-1-70

REVISIONS

5-27-70

7-15-70

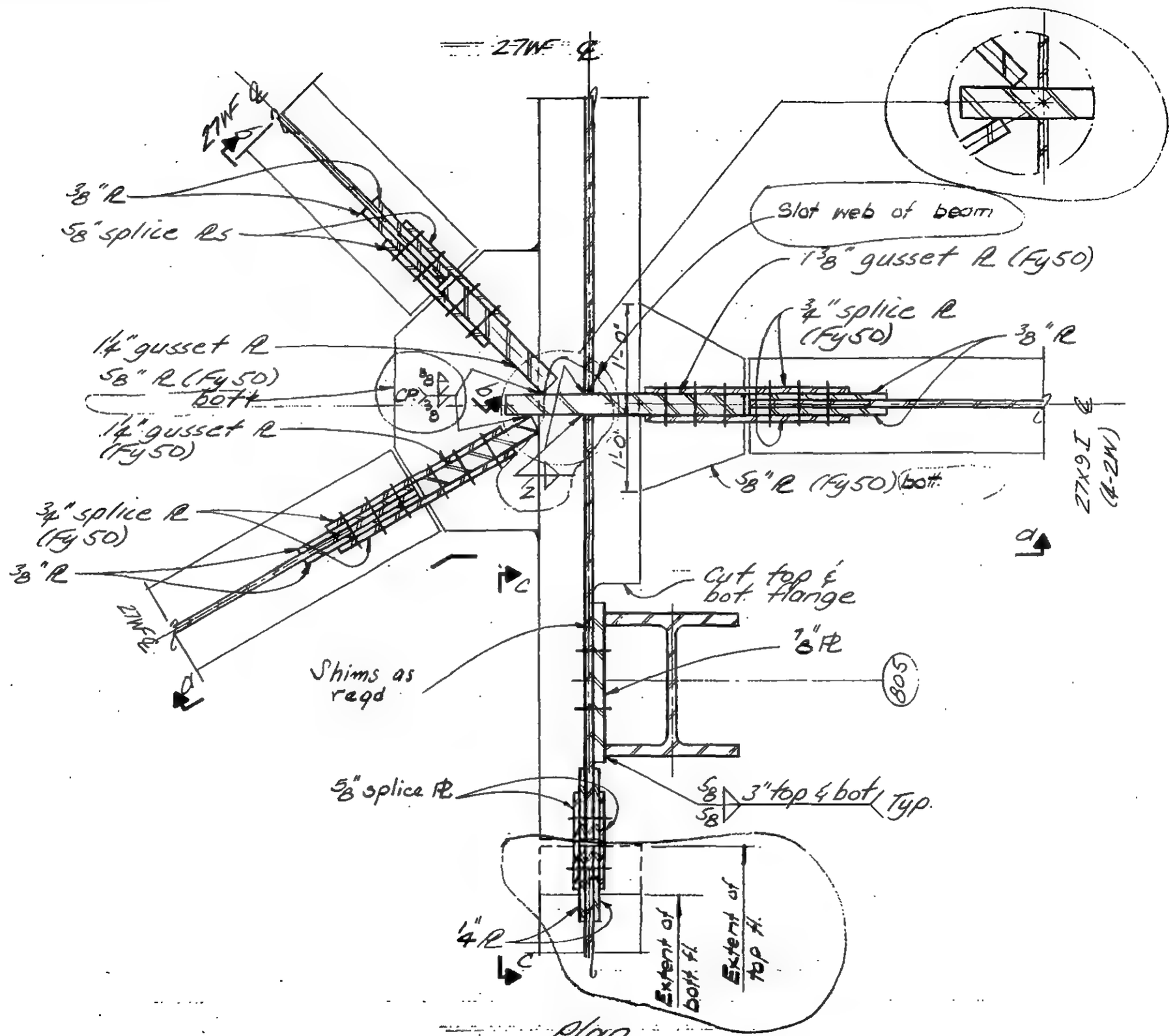

Plan

Detail 19-2A

LICENSED PROFESSIONAL ENGINEER — LESLIE E. ROBERTSON — No. 34960 — UNIVERSITY OF THE STATE OF NEW YORK

DESIGNED: L. Quirke

DRAWN: W. Clarke

REVIEWED: E. Dracos

9-AB19-2.1

SKILLING, HELLE, CHRISTIANSEN, ROBERTSON — Structural & Civil Engineers

PROJECT THE WORLD TRADE CENTER | TITLE FL 107-PH CONNECTION DETAILS - FL 108 | DATE 4-1-70

REVISIONS

5-27-70

7-15-70

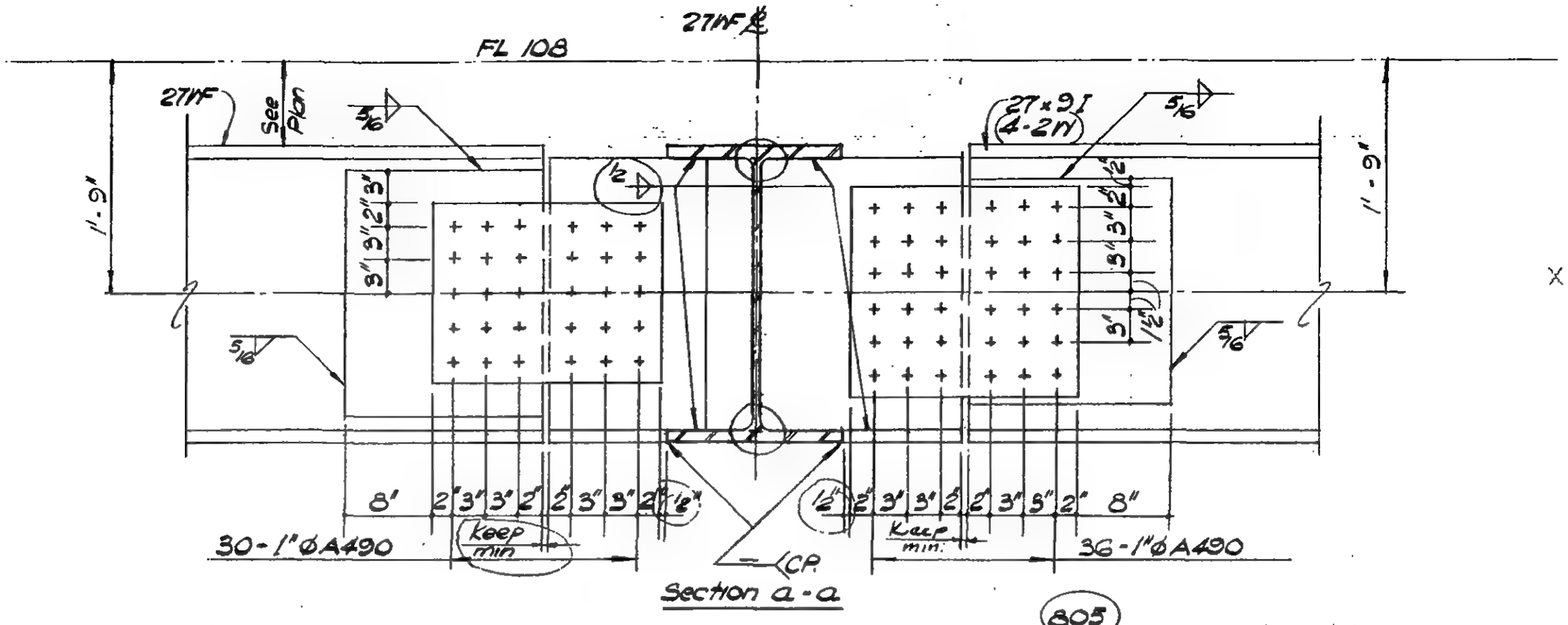

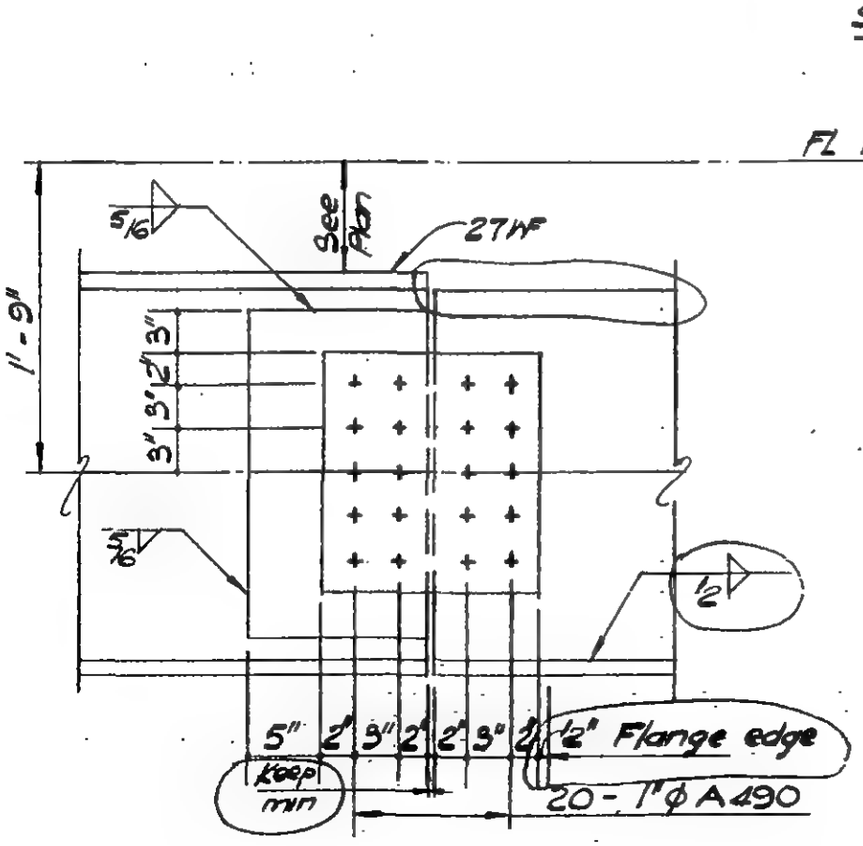

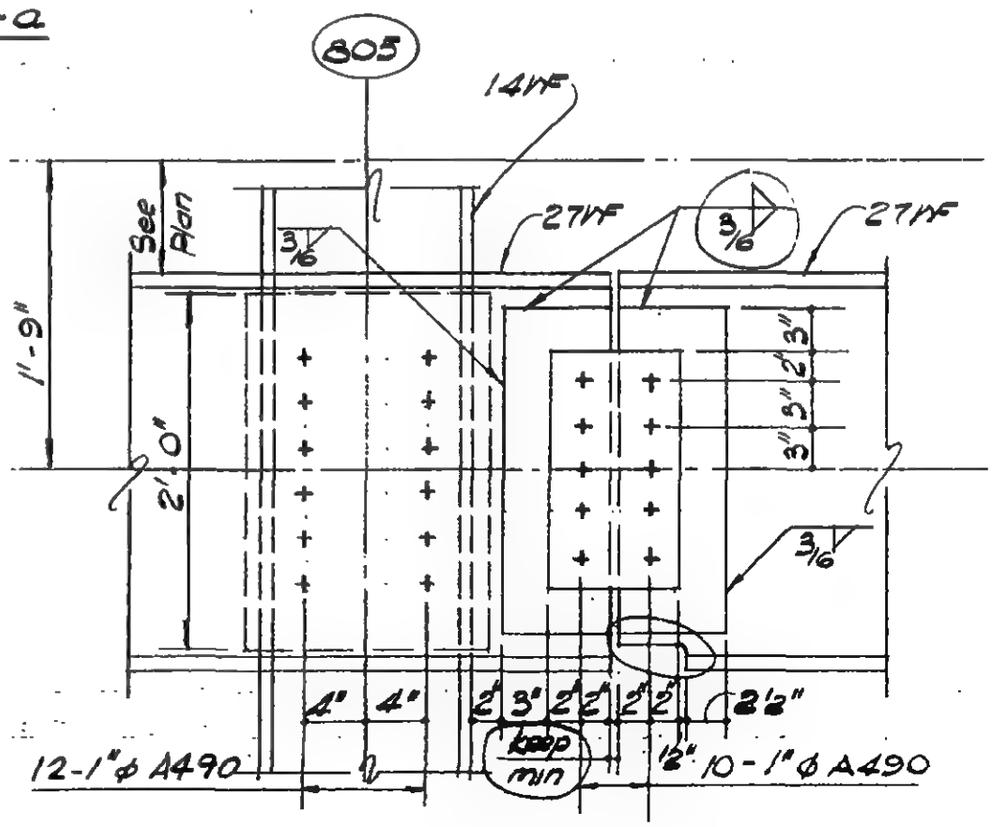

LICENSED PROFESSIONAL ENGINEER — LESLIE E. ROBERTSON — No. 34960 — UNIVERSITY OF THE STATE OF NEW YORK

DESIGNED L. Quirko

DRAWN W. Clarke

REVIEWED E. Drakos

9-AB19-2.2

SKILLING, HELLE, CHRISTIANSEN, ROBERTSON — Structural & Civil Engineers

PROJECT THE WORLD TRADE CENTER | TITLE FL 107-PH CONNECTION DETAILS - FL 108 | DATE 4-1-70

REVISIONS

5-27-70

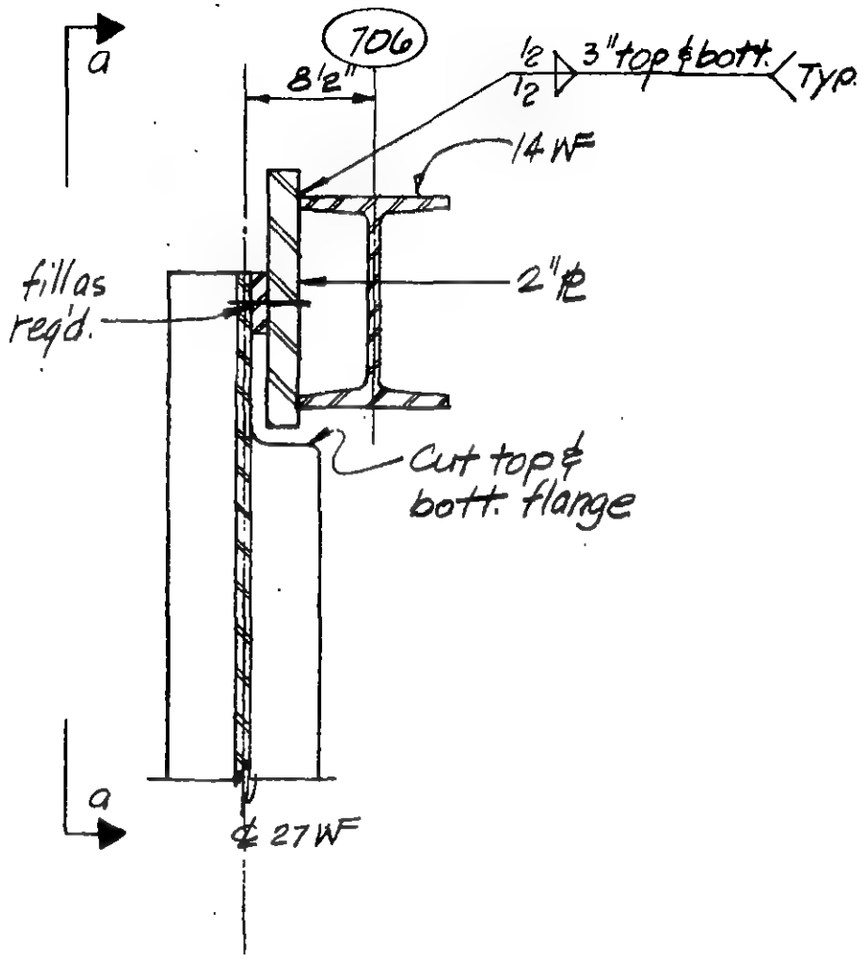

Plan

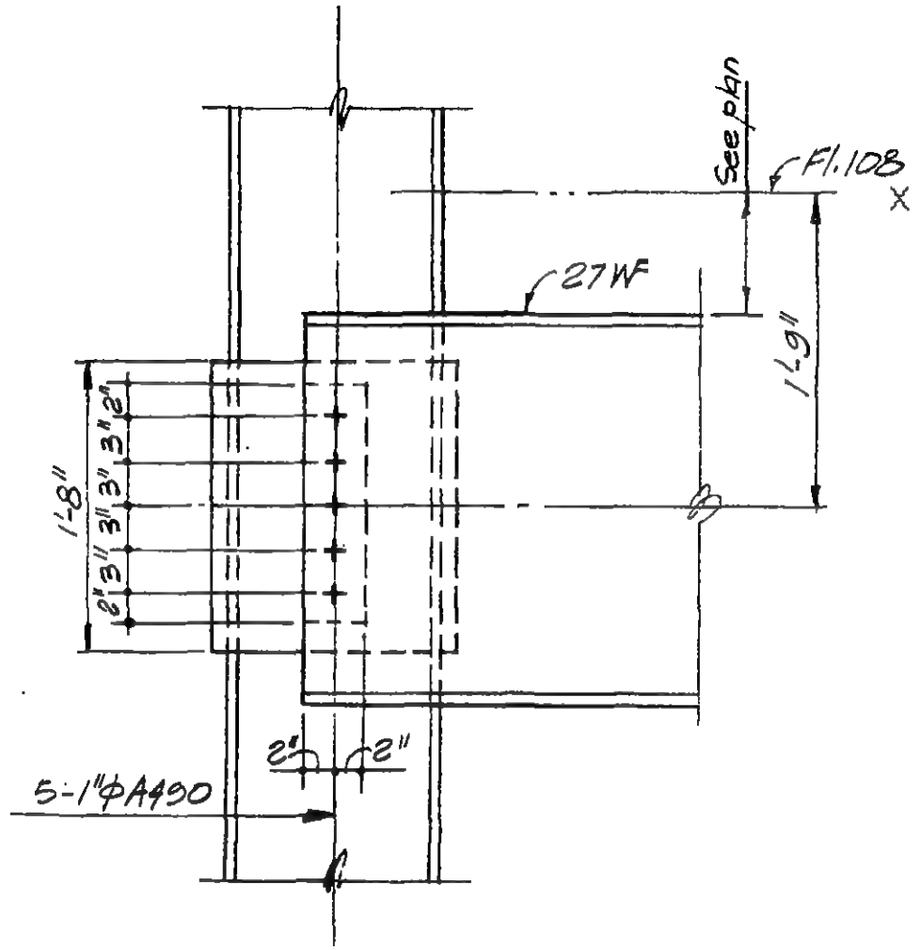

Section a-a

DETAIL 19-2B

LICENSED PROFESSIONAL ENGINEER
LESLIE E. ROBERTSON
No 34960
UNIVERSITY OF THE STATE OF NEW YORK

DESIGNED L. Quirko
DRAWN P. Ozcki
REVIEWED E. Drakos

9-AB19-2.3

SKILLING, HELLE, CHRISTIANSEN, ROBERTSON — Structural & Civil Engineers

PROJECT: THE WORLD TRADE CENTER

TITLE: FLOOR 107-PH CONNECTION DETAILS - EL 710

DATE: 4-1-70

REVISIONS

6-15-70

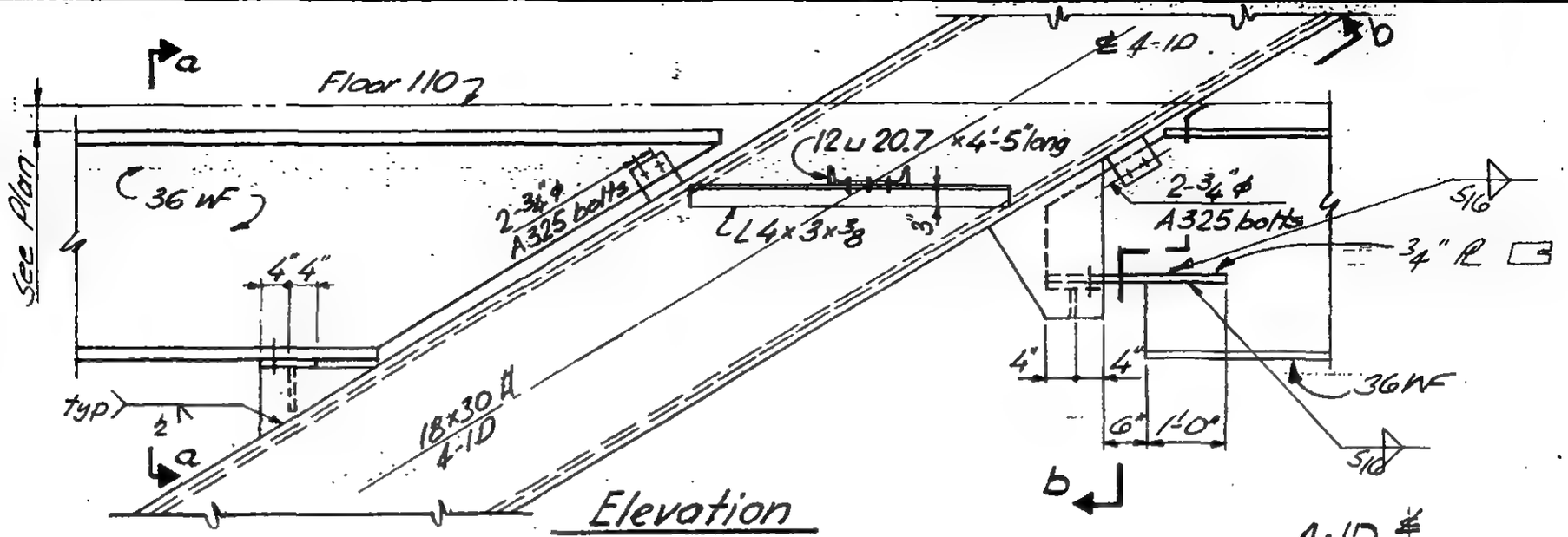

Elevation

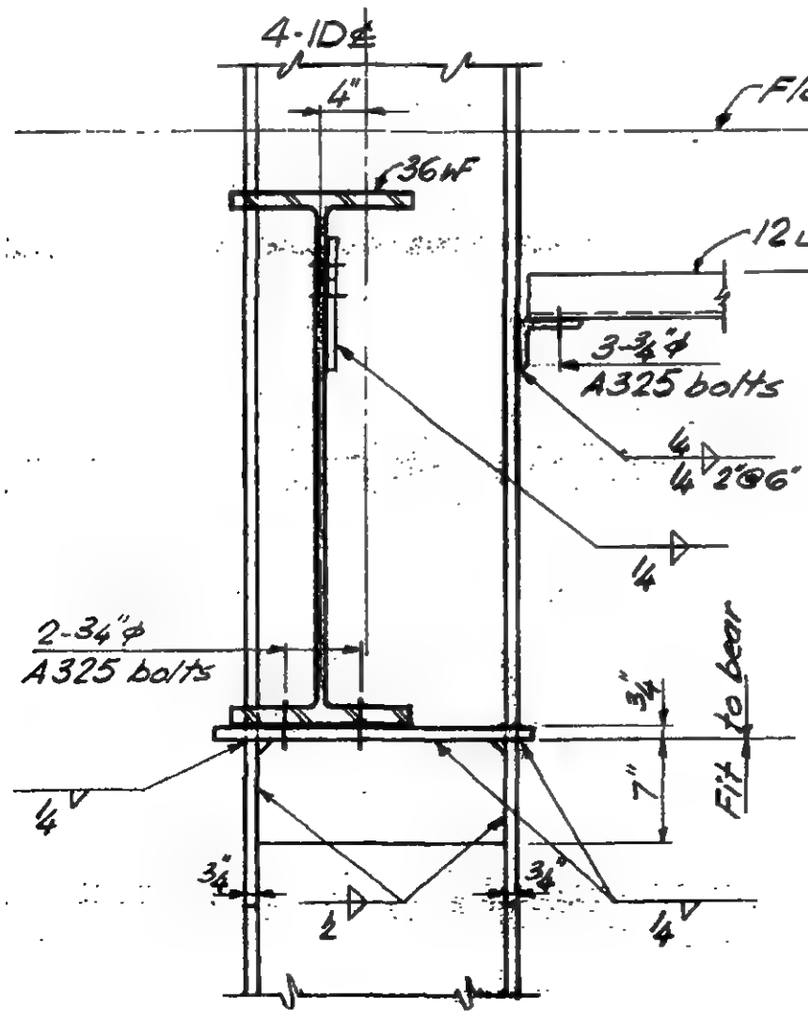

Section a-a

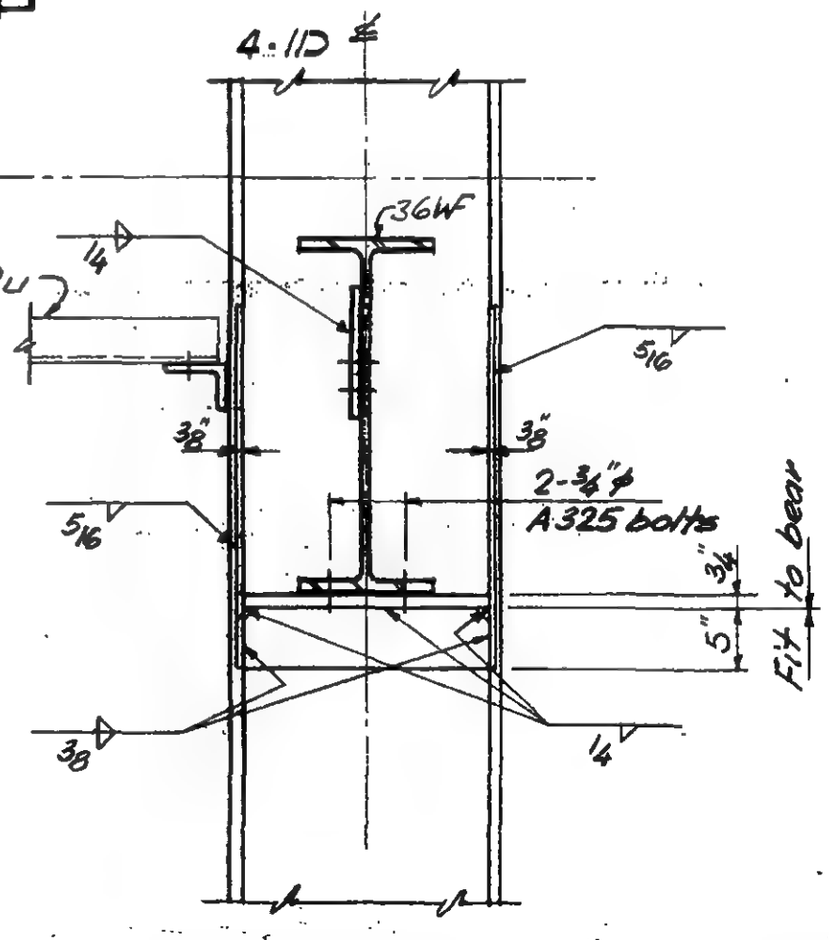

Section b-b

DESIGNED

DRAWN: J. Grlcius

REVIEWED: E. Drakos

9-AB19-3

SKILLING, HELLE, CHRISTIANSEN, ROBERTSON — Structural & Civil Engineers

PROJECT: THE WORLD TRADE CENTER | TITLE: FL 107 - PH CONNECTION DETAILS - FL 109 | DATE: 4-1-70

REVISIONS

6-15-70

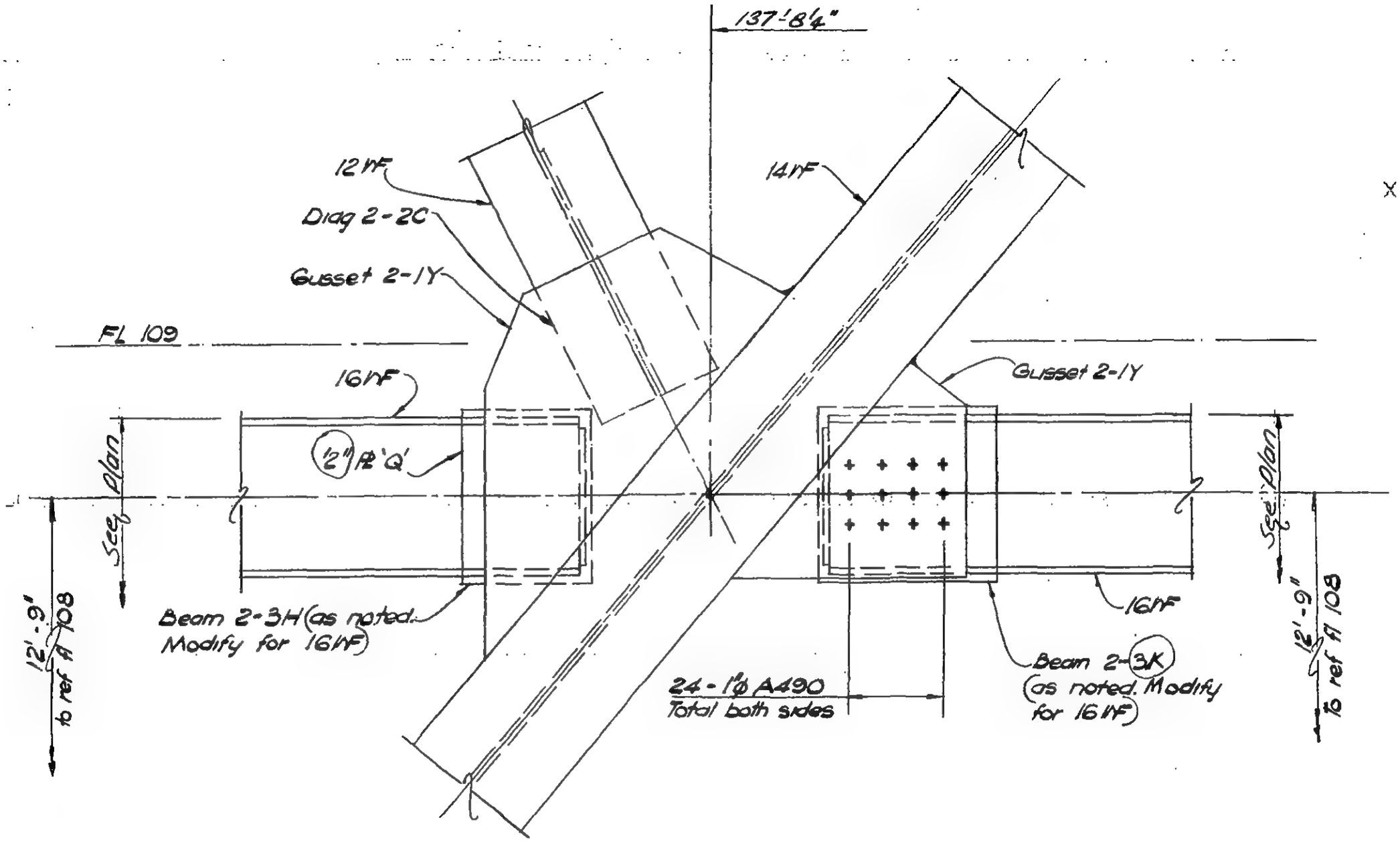

DETAIL 19 - 4

LICENSED PROFESSIONAL ENGINEER — LESLIE E. ROBERTSON — No. 34360 — UNIVERSITY OF THE STATE OF NEW YORK

DESIGNED

DRAWN: W. Clarke

REVIEWED: E. Drakos

9 - AB/9 - 4

SKILLING, HELLE, CHRISTIANSEN, ROBERTSON — Structural & Civil Engineers

PROJECT THE WORLD TRADE CENTER | TITLE FLOOR 107 - PH CONNECTION DETAILS | DATE 4-1-70

REVISIONS

6-15-70

Fl. 108

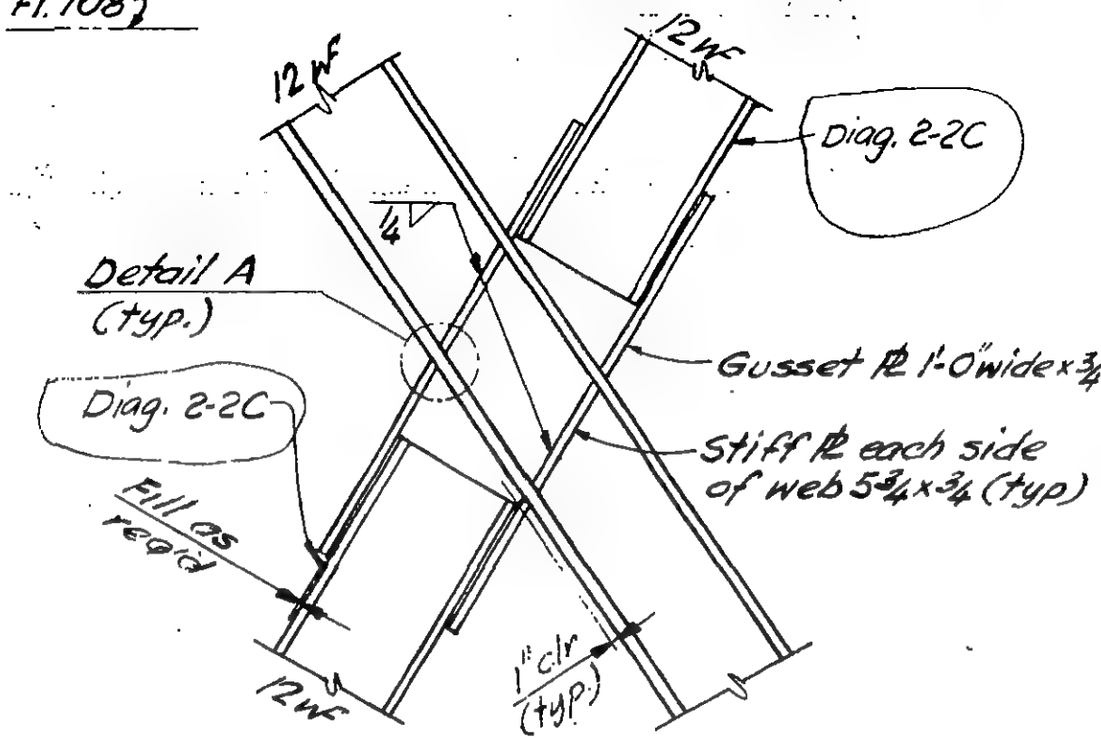

Elevation

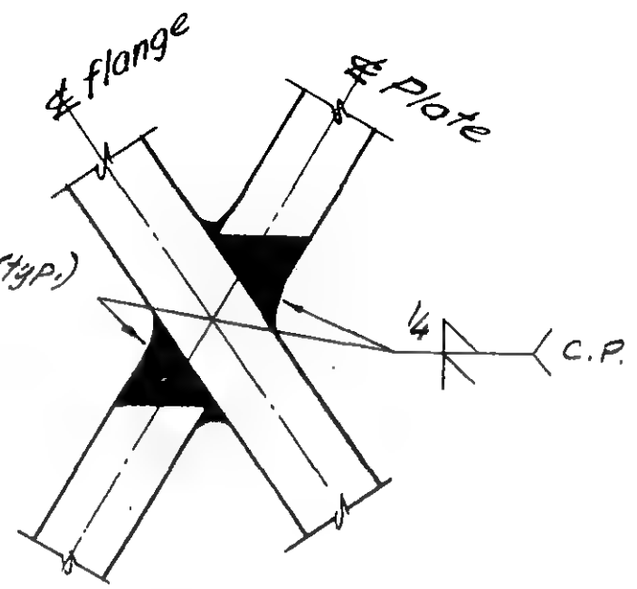

Detail "A"

DETAIL 19-5

DESIGNED

DRAWN J. Gricius

REVIEWED E. Drakos

9-AB19-5

SKILLING, HELLE, CHRISTIANSEN, ROBERTSON — Structural & Civil Engineers

PROJECT: THE WORLD TRADE CENTER | TITLE: FL 107 - PH CONNECTION DETAILS | DATE: 6 - 15 - 70

REVISIONS

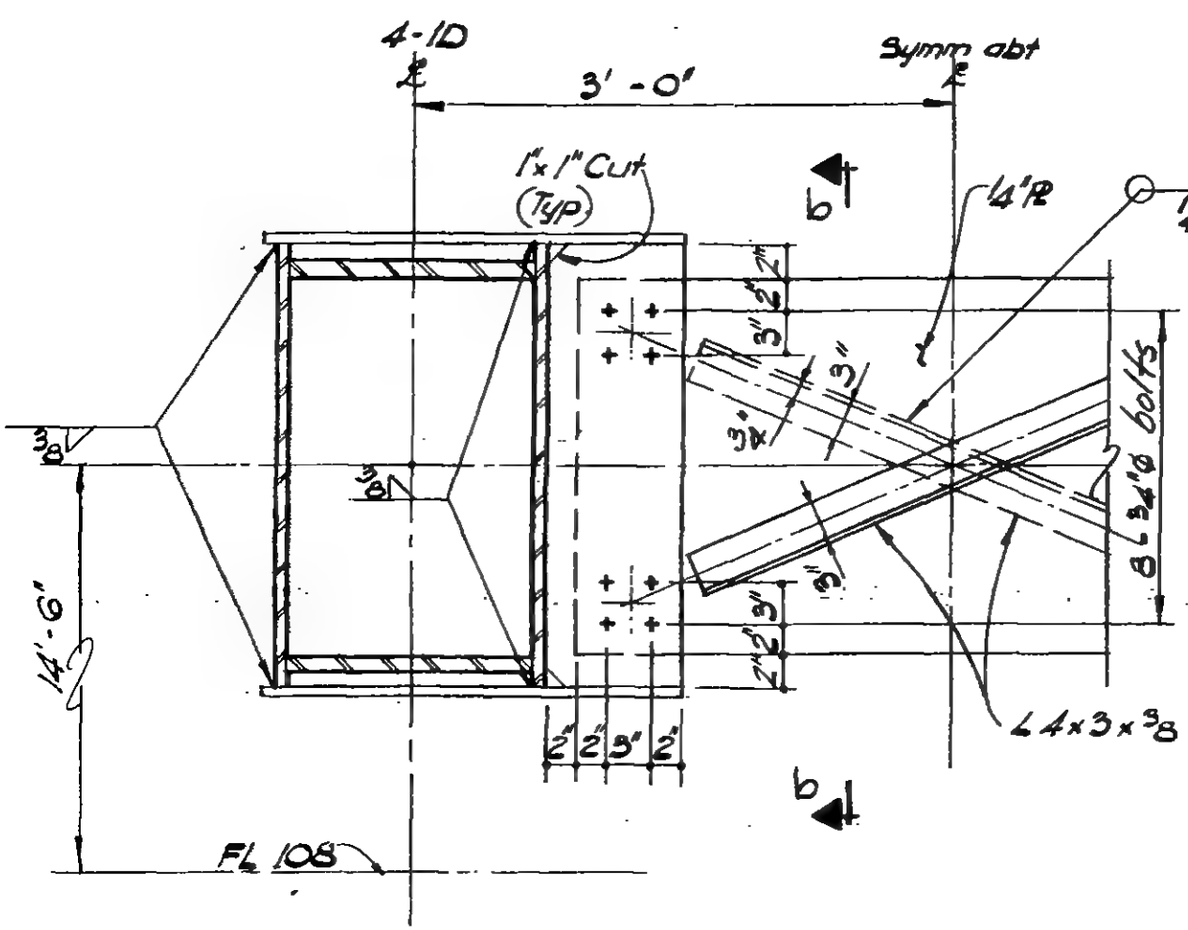

Section a - a

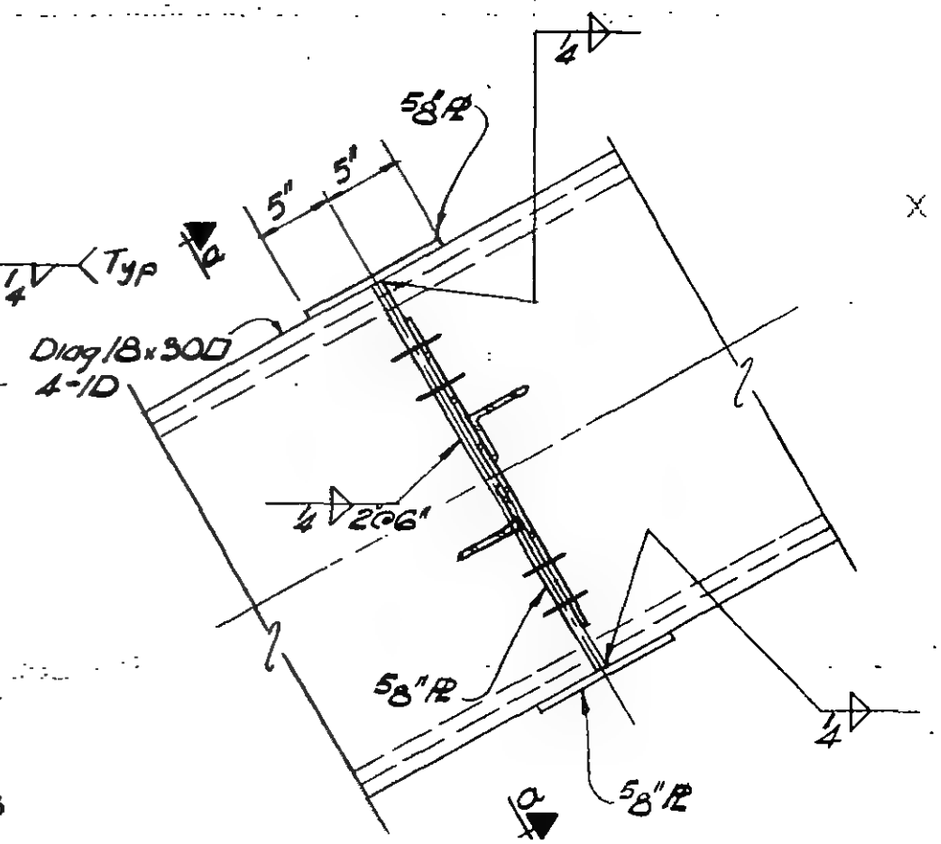

Section b - b

DETAIL 19-6

LICENSED PROFESSIONAL ENGINEER
LESLIE E. ROBERTSON
No. 34860
UNIVERSITY OF THE STATE OF NEW YORK

DESIGNED J. Goss
DRAWN W. Clarke
REVIEWED E. Drakos

9-AB/9-6

THE WORLD TRADE ... | TITLE FL 107 - PH CONNECTION DETAILS - FL 109 | DATE 6-15-...

REVISIONS

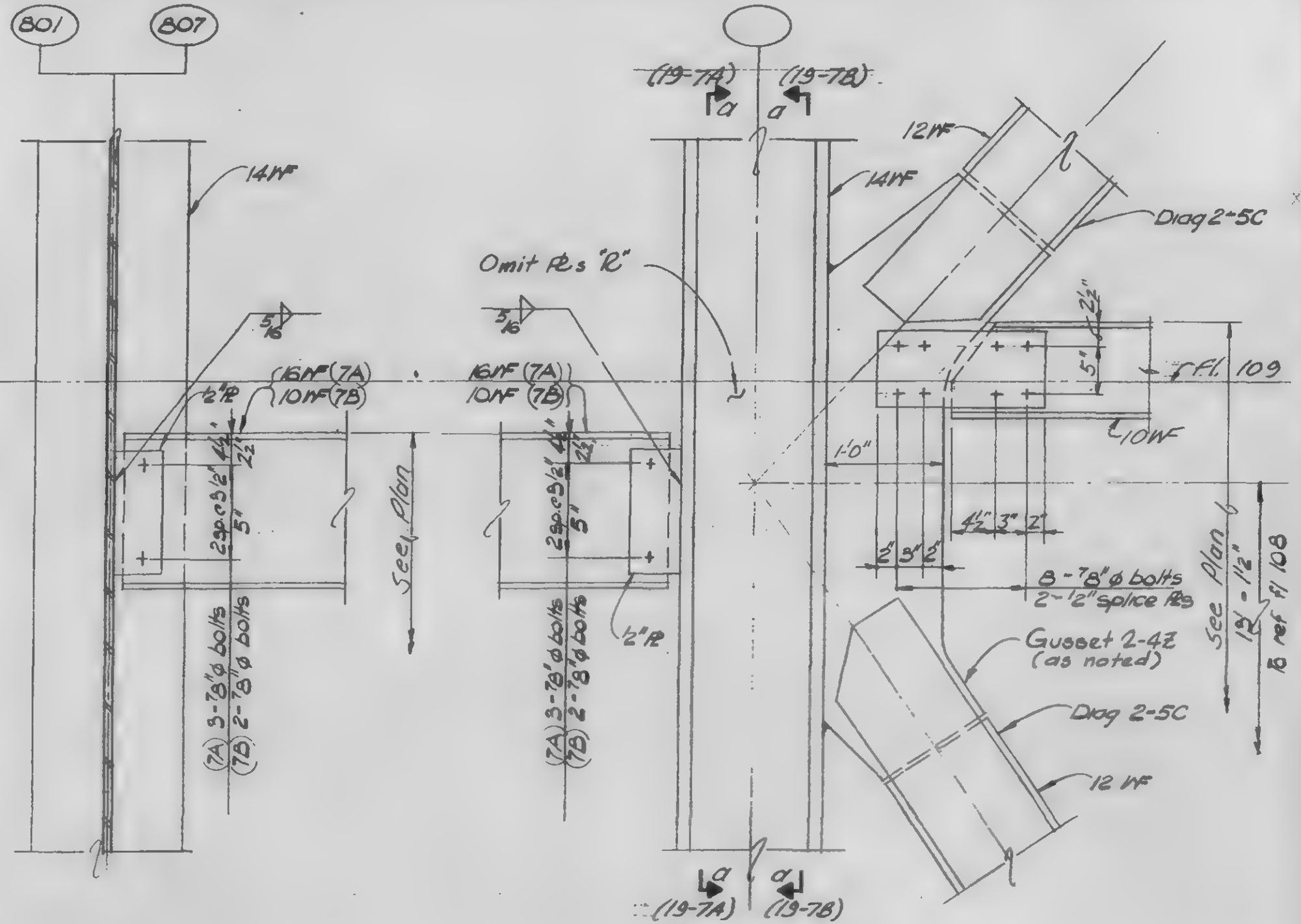

Section a - a

Section b - b

DETAIL 19-7A (Col. 801 as shown)
DETAIL 19-7B (Col 807 as noted)

9-AB19-7.1

LICENSED PROFESSIONAL ENGINEER
LESLIE E. ROBERTSON
No. 34360
UNIVERSITY OF THE STATE OF NEW YORK

DESIGNED

DRAWN
W. Clarke

REVIEWED
E. Drakos

SKILLING, HELLE, CHRISTIANSEN, ROBERTSON — Structural & Civil Engineers

PROJECT: THE WORLD TRADE CENTER | TITLE: FL 107 - PH CONNECTION DETAILS - FL 109 | DATE: 6 - 15 - 70

REVISIONS

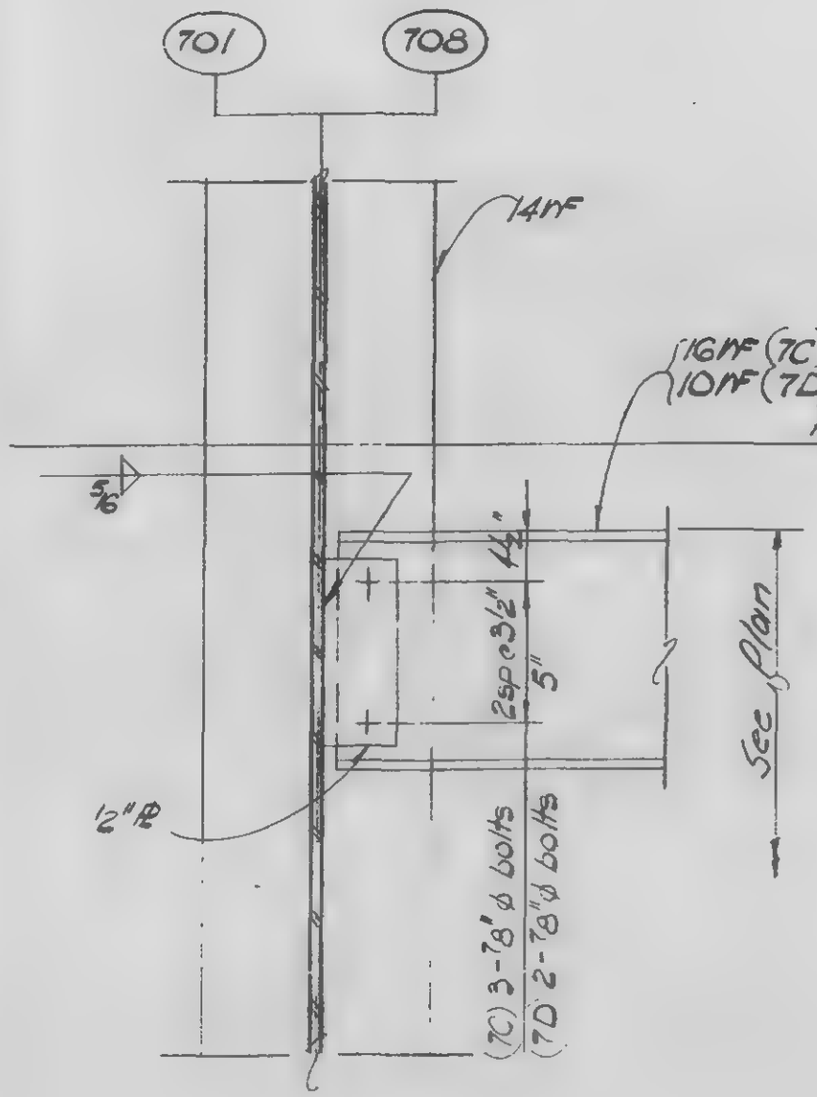

Section a-a

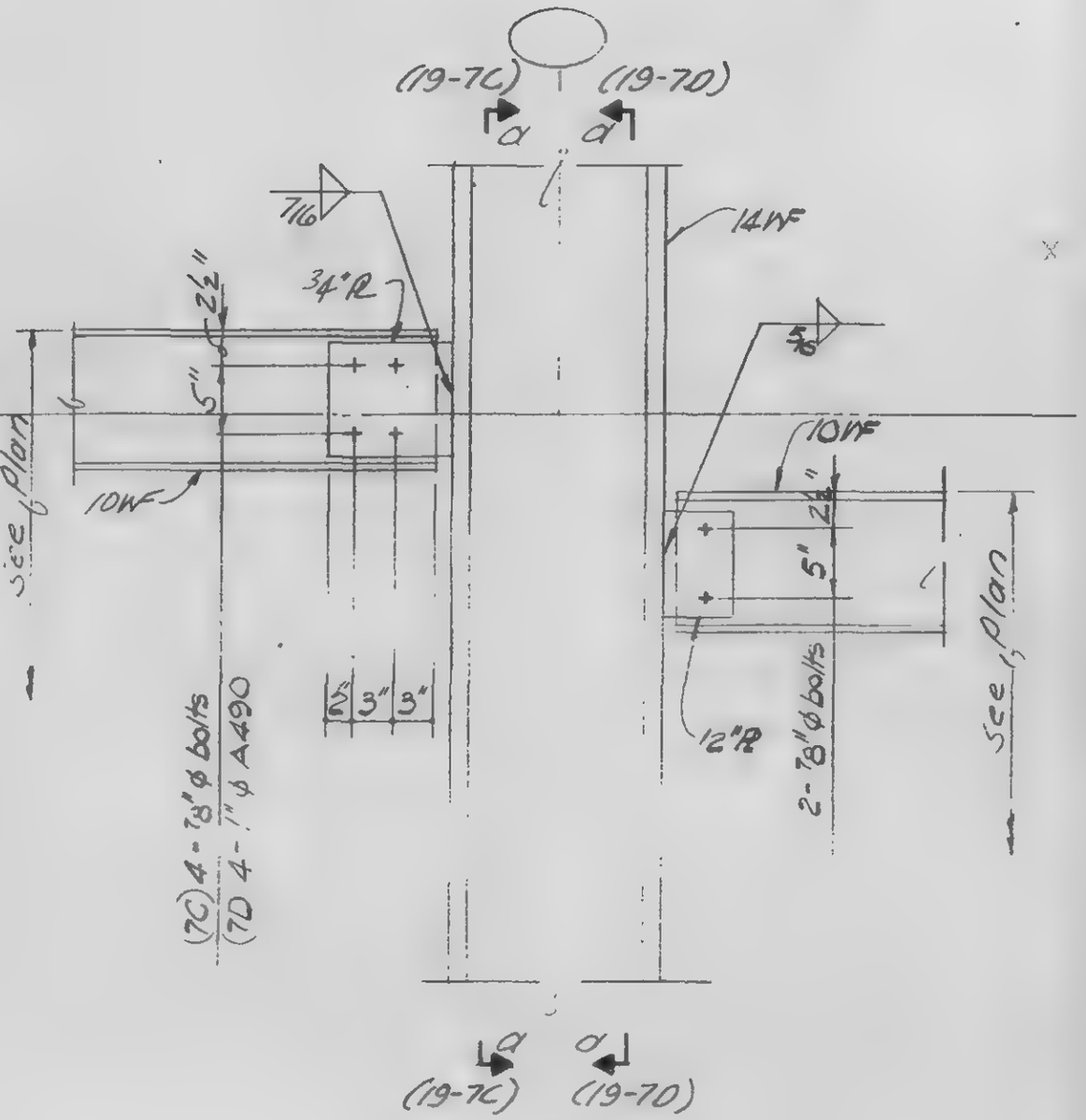

Section b-b

DETAIL 19-7C Col. 701 as shown

DETAIL 19-7D Co. 708 as noted

LICENSED PROFESSIONAL ENGINEER — LESLIE E. ROBERTSON — No 34360 — UNIVERSITY OF THE STATE OF NEW YORK

DESIGNED

DRAWN: W. Clarke

REVIEWED: E. Drakos

9-AB.19-7.2

SKILLING, HELLE, CHRISTIANSEN, ROBERTSON — Structural & Civil Engineers

PROJECT: THE WORLD TRADE CENTER | TITLE: FL 107 - P.H. CONNECTION DETAIL - P.H. ROOF | DATE: 4-1-70

REVISIONS

6-18-70
VOID ~~9-25-70~~
6-18-70

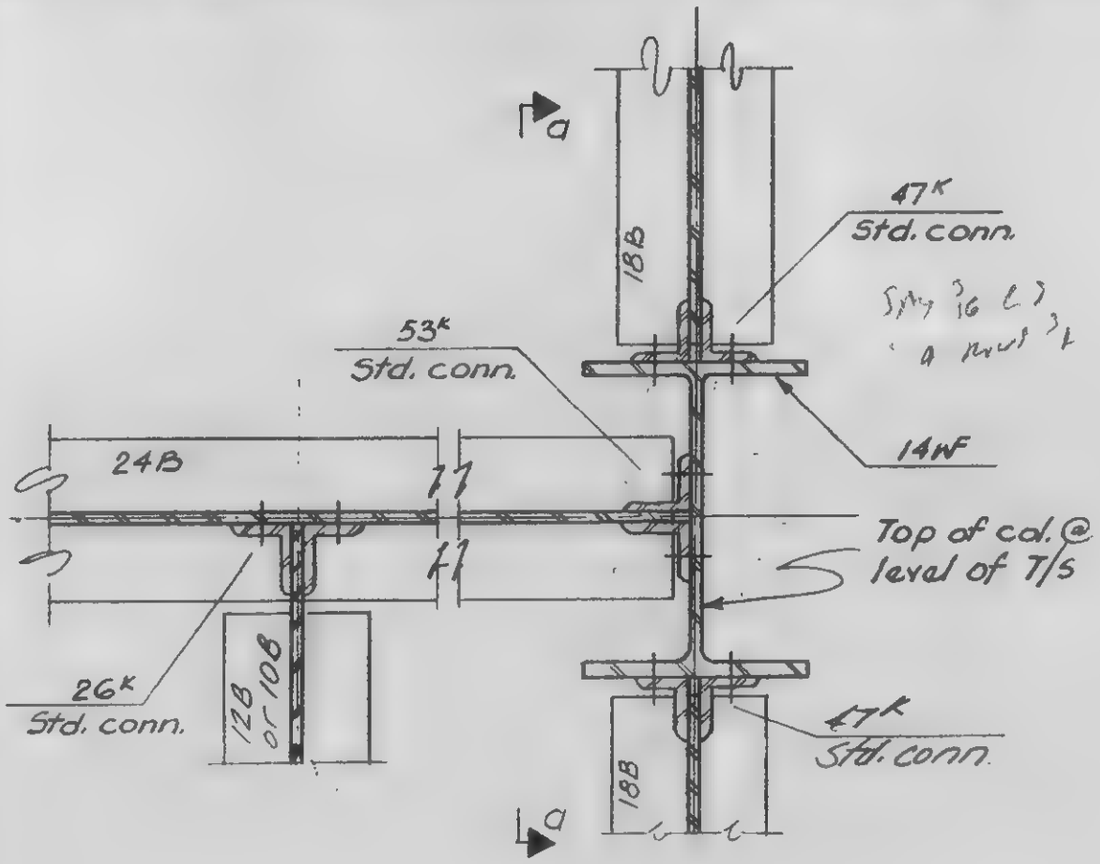

Detail 20-1A

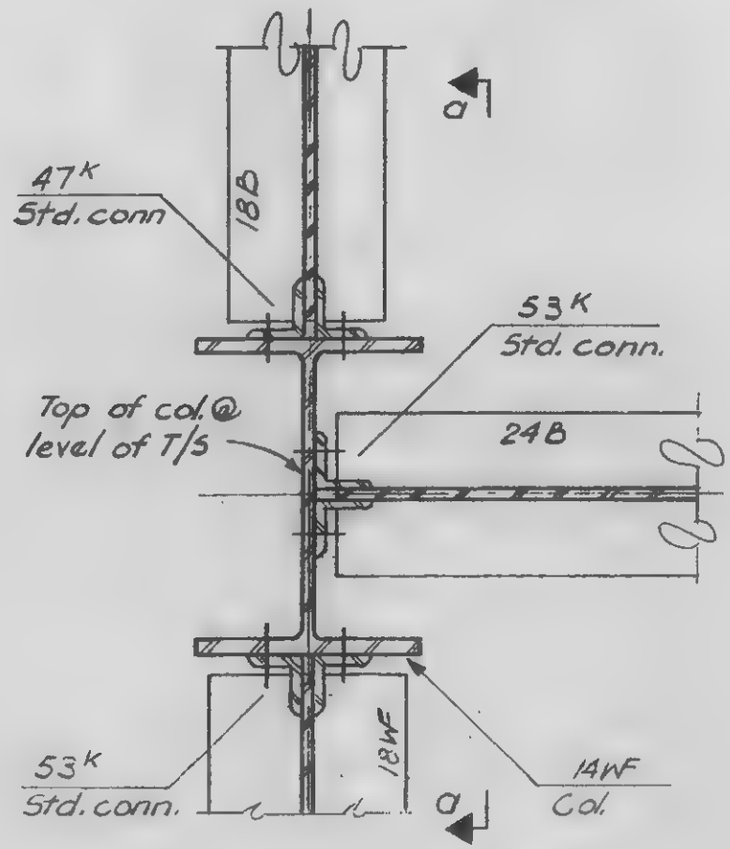

Detail 20-1B

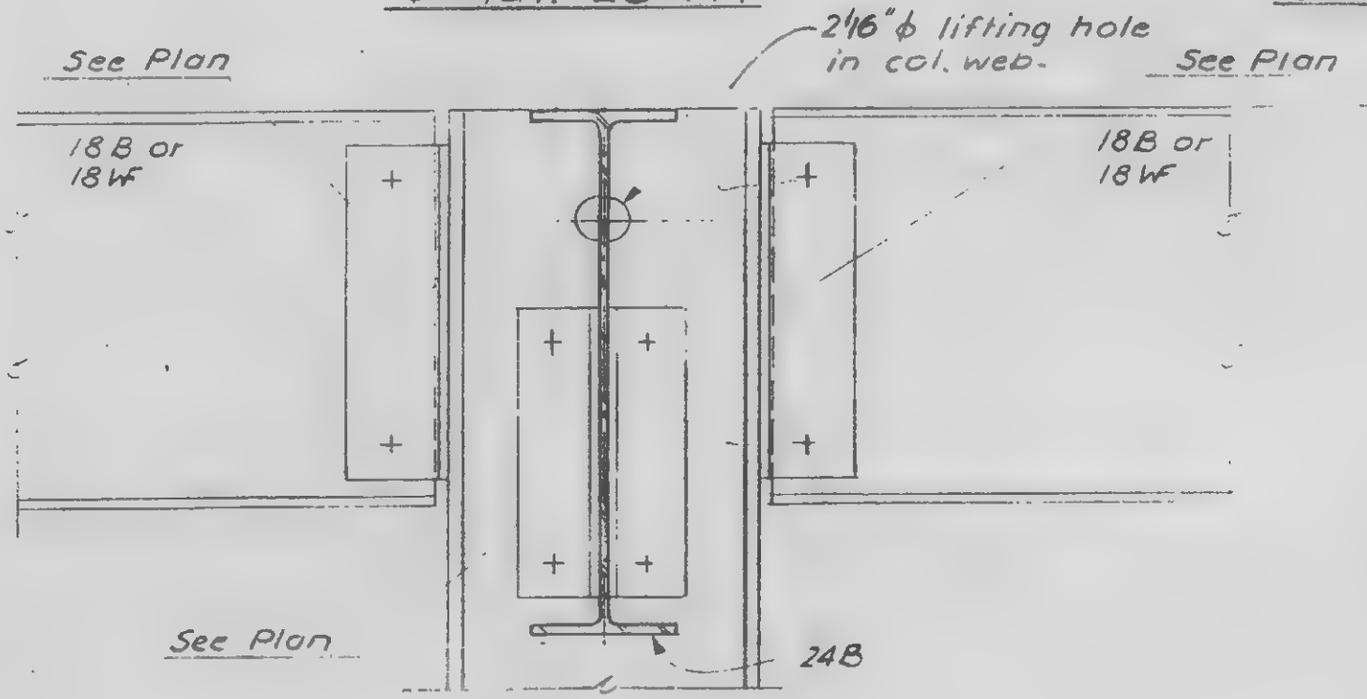

Section a-a

LICENSED PROFESSIONAL ENGINEER
LESLIE E. ROBERTSON
No. 34360
UNIVERSITY OF THE STATE OF NEW YORK

DESIGNED

DRAWN
D. Huggins

REVIEWED

9-AB 20-1.1

SKILLING, HELLE, CHRISTIANSEN, ROBERTSON — Structural & Civil Engineers

PROJECT THE WORLD TRADE CENTER | TITLE Fl. 107-PH, CONNECTION DETAIL - PH ROOF | DATE 4-1-70

REVISIONS

VOID 6-18-70
~~9-25-70~~
6-18-70

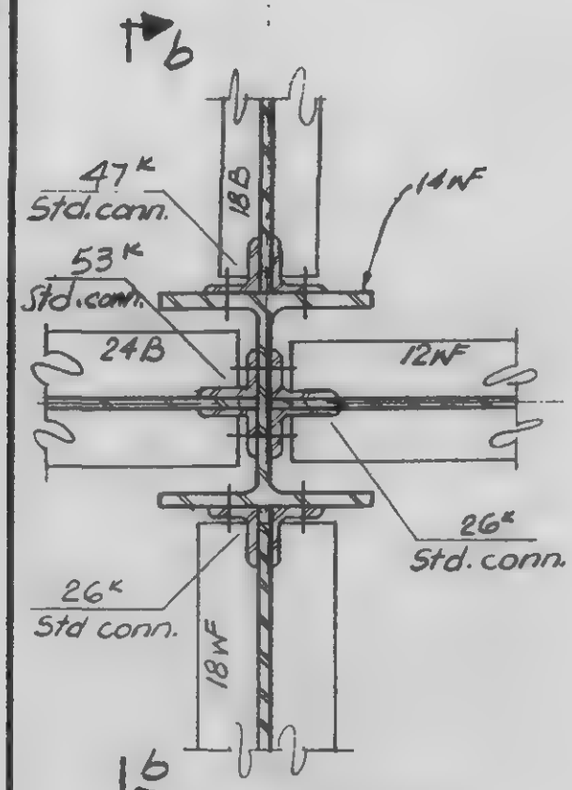

Detail 20-1C

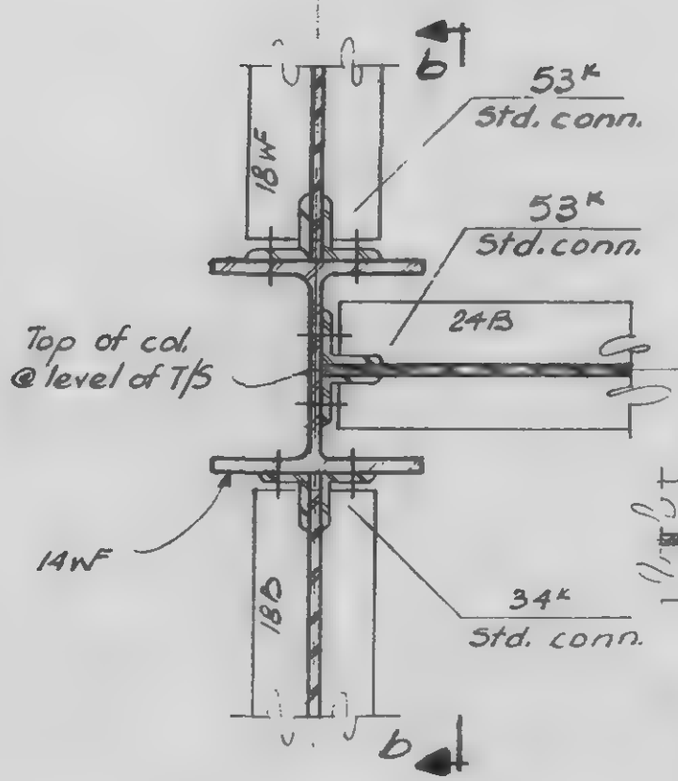

DETAIL 20-1D

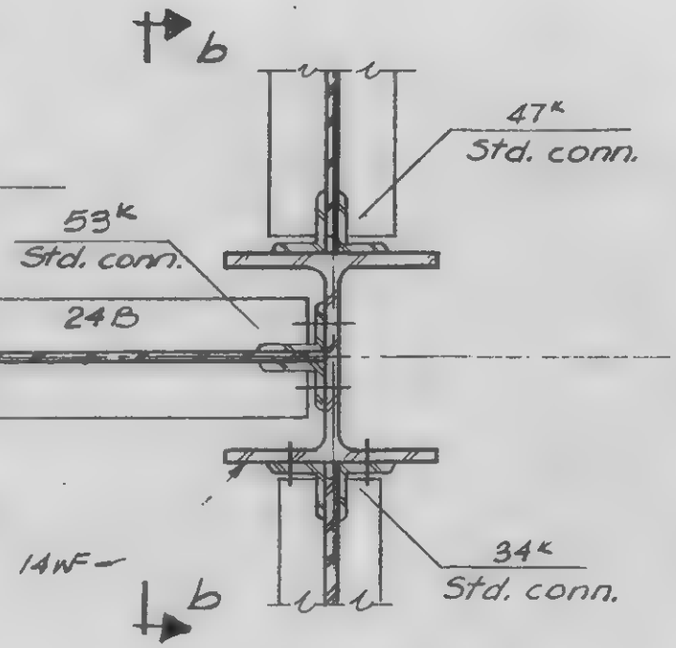

DETAIL 20-1E

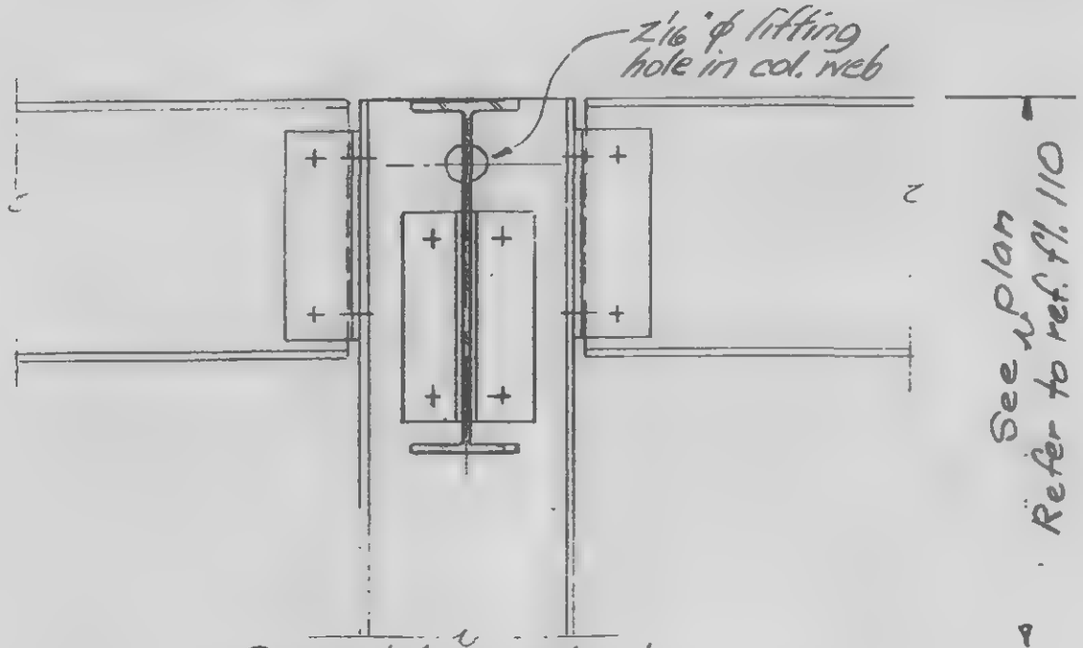

Section b-b

LICENSED PROFESSIONAL ENGINEER — LESLIE E. ROBERTSON — No 34360 — UNIVERSITY OF THE STATE OF NEW YORK

DESIGNED

DRAWN
D. Huggins

REVIEWED

9-AB 20-1.2.

SKILLING, HELLE, CHRISTIANSEN, ROBERTSON — Structural & Civil Engineers

PROJECT THE TRADE WORLD CENTER | TITLE FL. 107 P.H. CONNECTION DETAILS-PH ROOF | DATE 4-1-70

REVISIONS

6/18/70

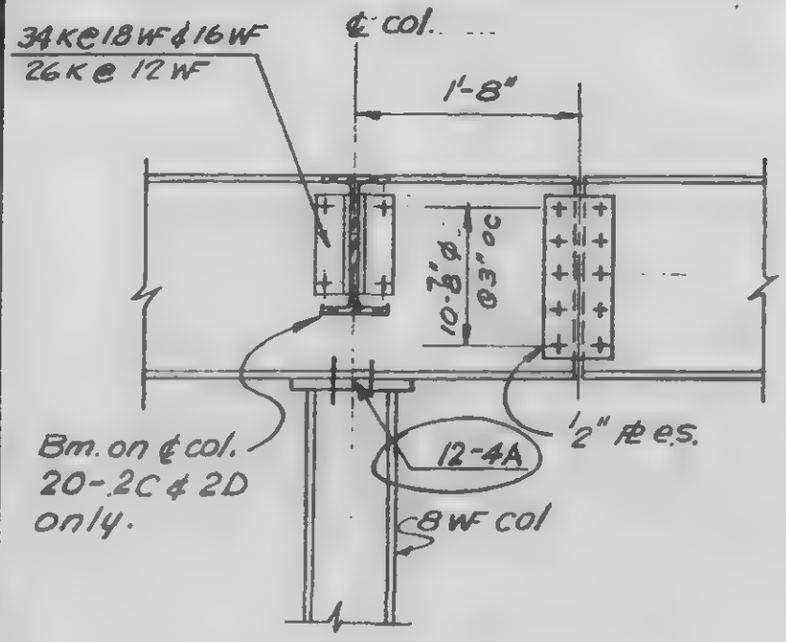

Detail 20-2A

Detail 20-2C & 2D as noted

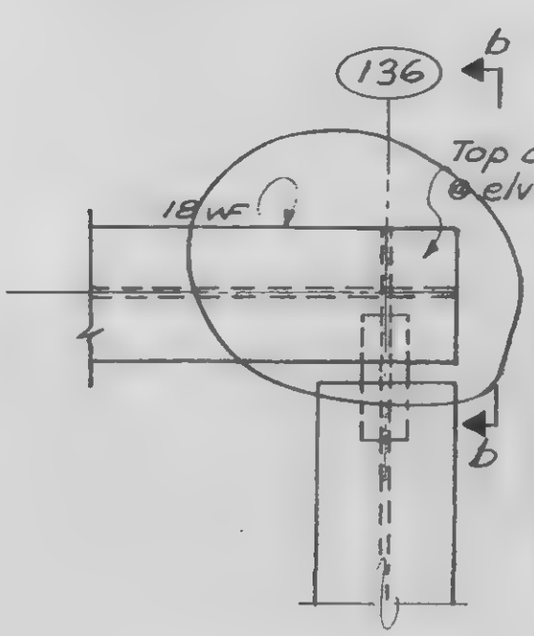

Detail 20-2B

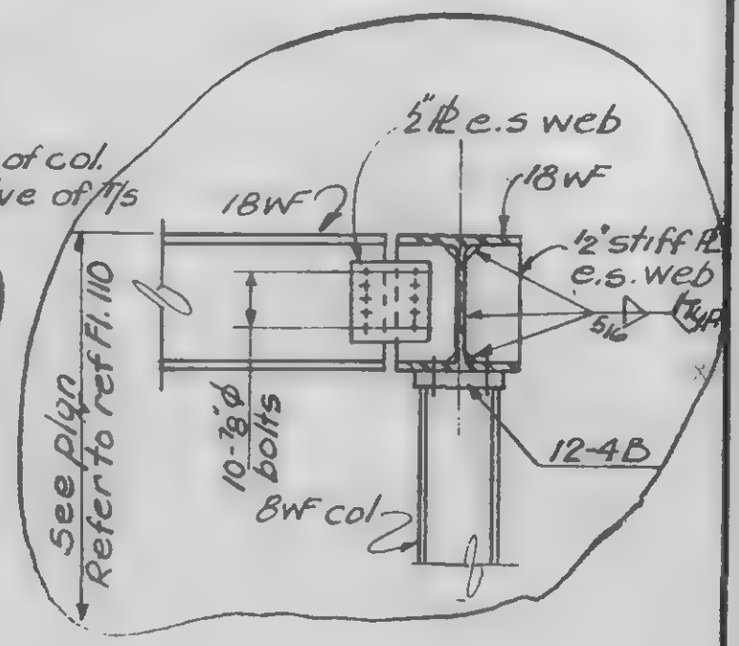

Section b-b

LICENSED PROFESSIONAL ENGINEER
LESLIE E. ROBERTSON
No 34360
UNIVERSITY OF THE STATE OF NEW YORK

DESIGNED

DRAWN
V. H. A

REVIEWED

9-AB20-2

SKILLING, HELLE, CHRISTIANSEN, ROBERTSON — Structural & Civil Engineers

PROJECT: THE WORLD TRADE CENTER | TITLE: FL.107-PH CONNECTION DETAIL-PH ROOF | DATE: 4-1-70

REVISIONS

6/18/70

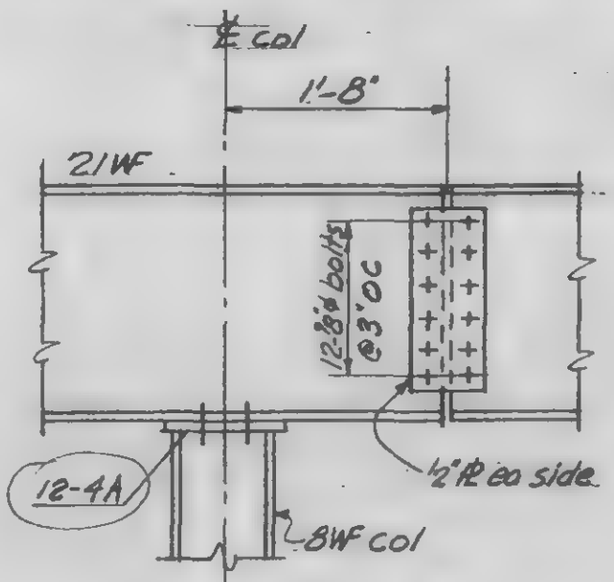

Detail 20.3A

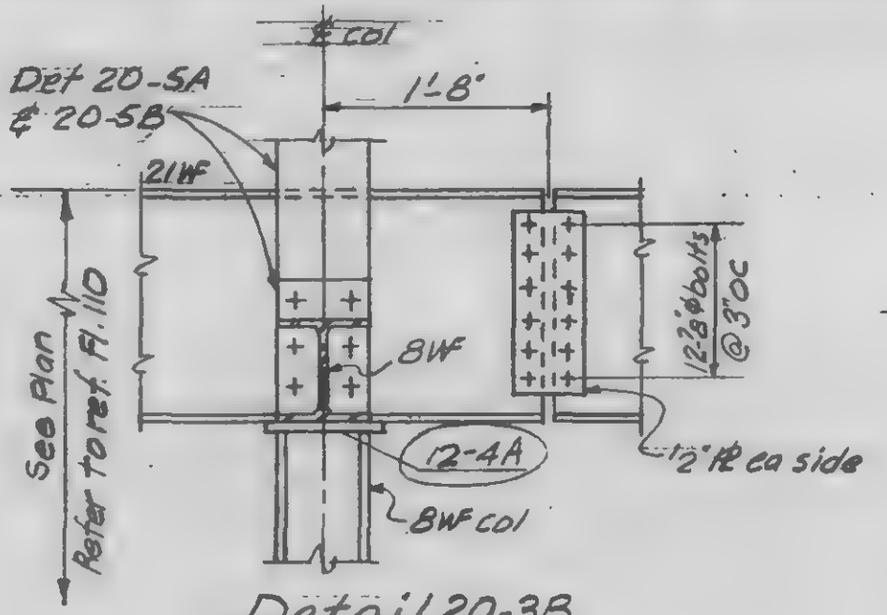

Detail 20-3B

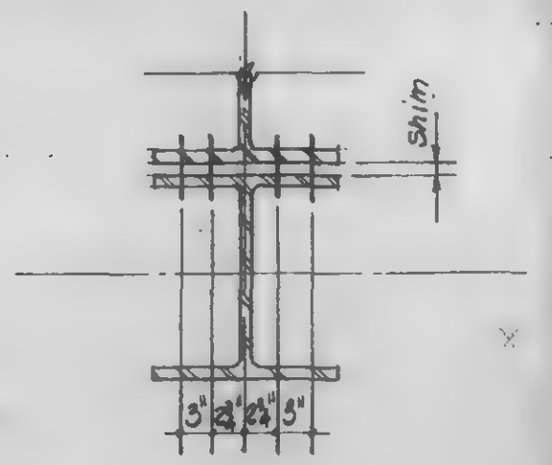

Section b-b

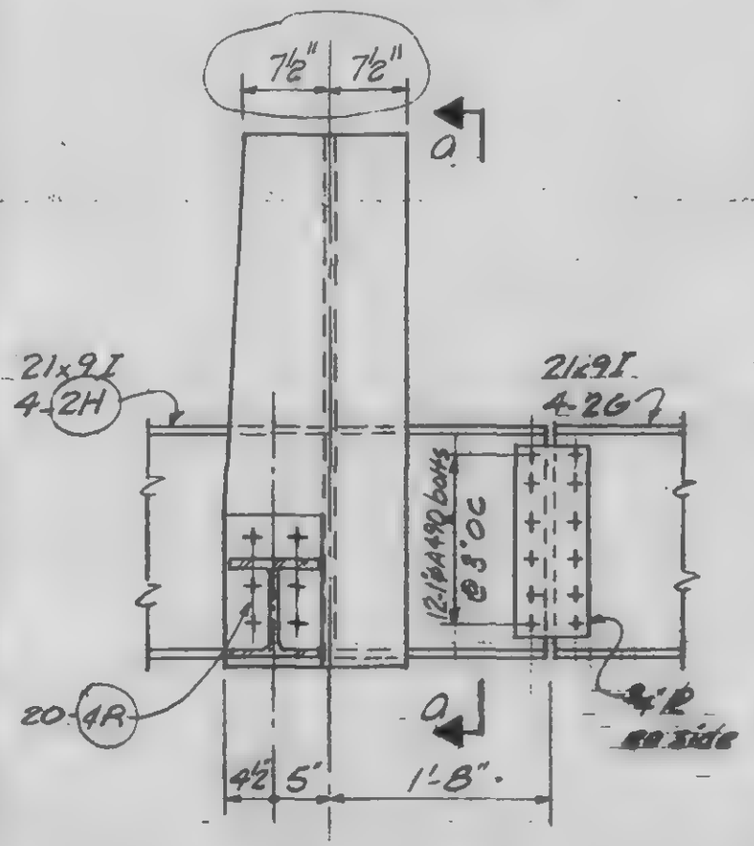

Detail 20-C
opp. col. 215

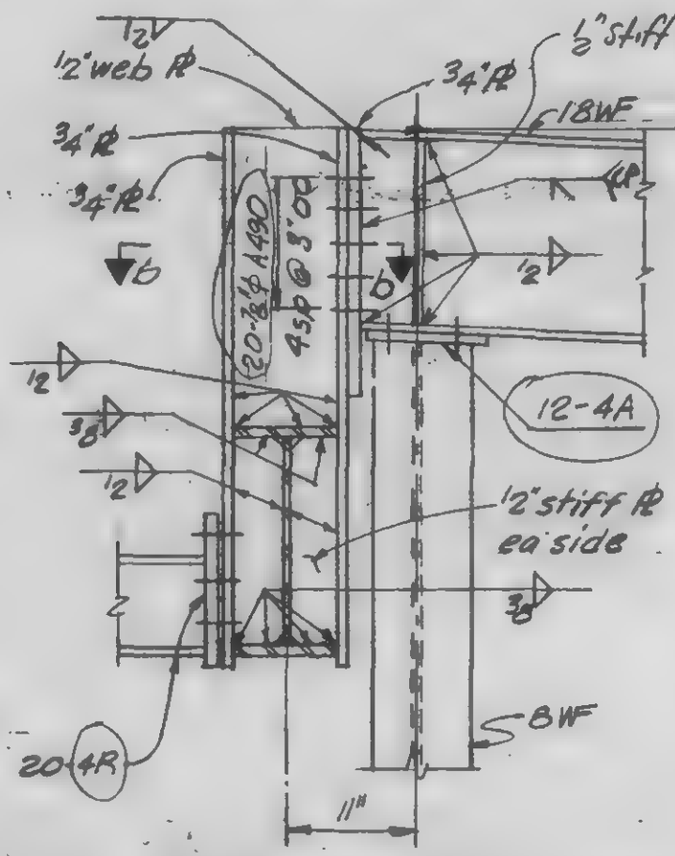

Section a-a

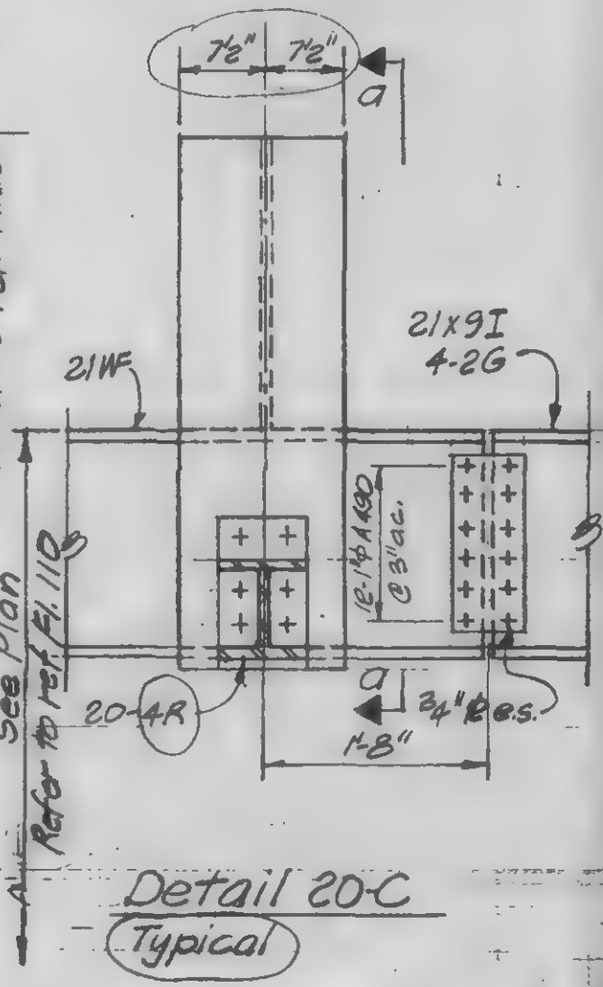

Detail 20-C
Typical

LICENSED PROFESSIONAL ENGINEER — LESLIE E. ROBERTSON — No. 34360 — UNIVERSITY OF THE STATE OF NEW YORK

DESIGNED

DRAWN A.F.

REVIEWED

9-AB20-3.1

SKILLING, HELLE, CHRISTIANSEN, ROBERTSON — Structural & Civil Engineers

PROJECT: THE WORLD TRADE CENTER | TITLE: FL 107-PH CONNECTION DETAILS- PH ROOF | DATE: 4-1-70

REVISIONS

6/18/70

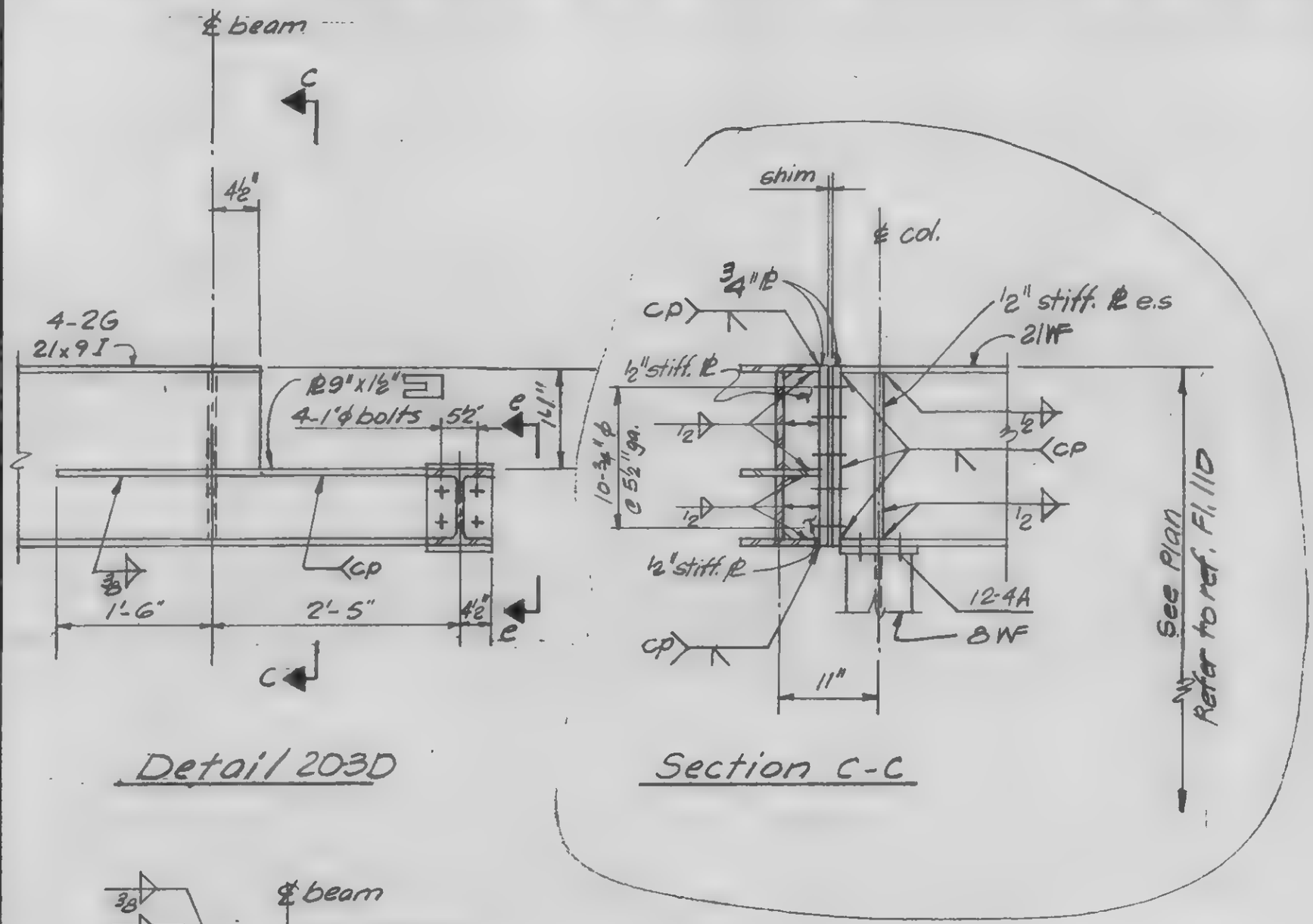

Detail 203D

Section C-C

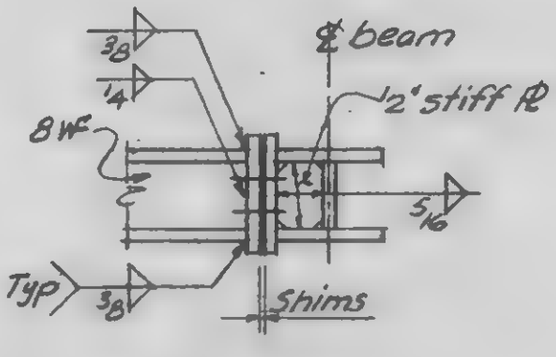

Section e-e

LICENSED PROFESSIONAL ENGINEER — LESLIE E. ROBERTSON — No 34360 — UNIVERSITY OF THE STATE OF NEW YORK

DESIGNED

DRAWN A.F.

REVIEWED

9-AB20-32

SKILLING, HELLE, CHRISTIANSEN, ROBERTSON — Structural & Civil Engineers

PROJECT: THE WORLD TRADE CENTER | TITLE: FL 107-PH CONNECTION DETAILS-PH ROOF | DATE: 4-1-70

REVISIONS

6/18/70

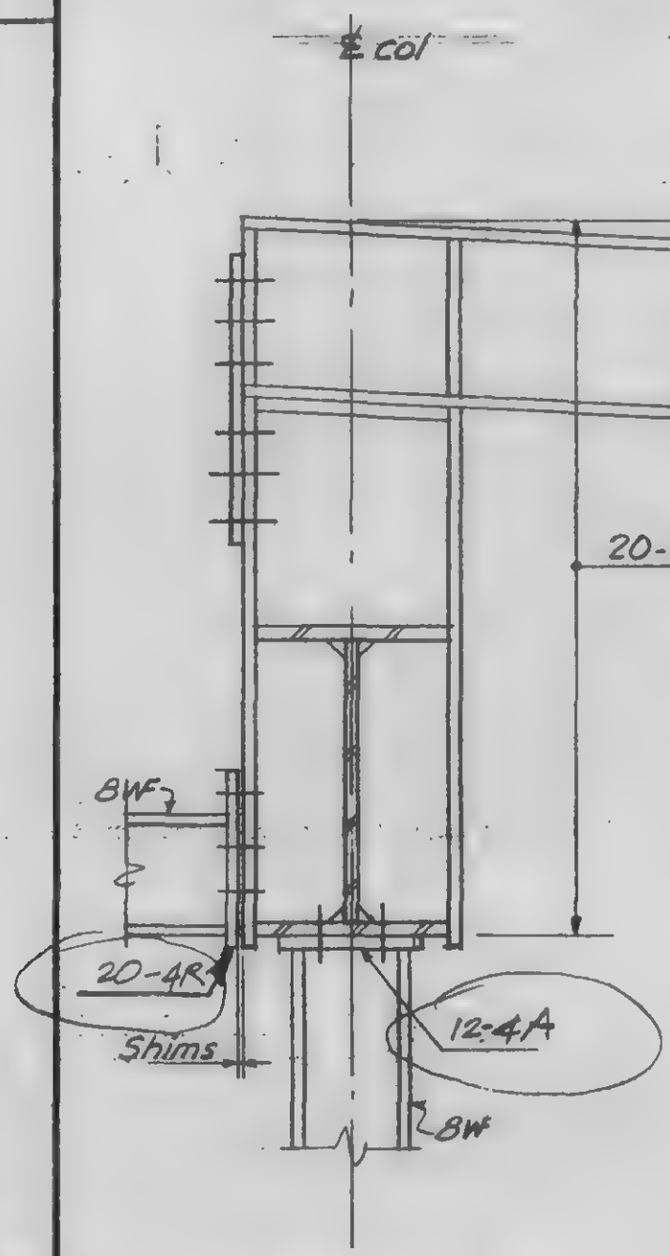

Section f-f

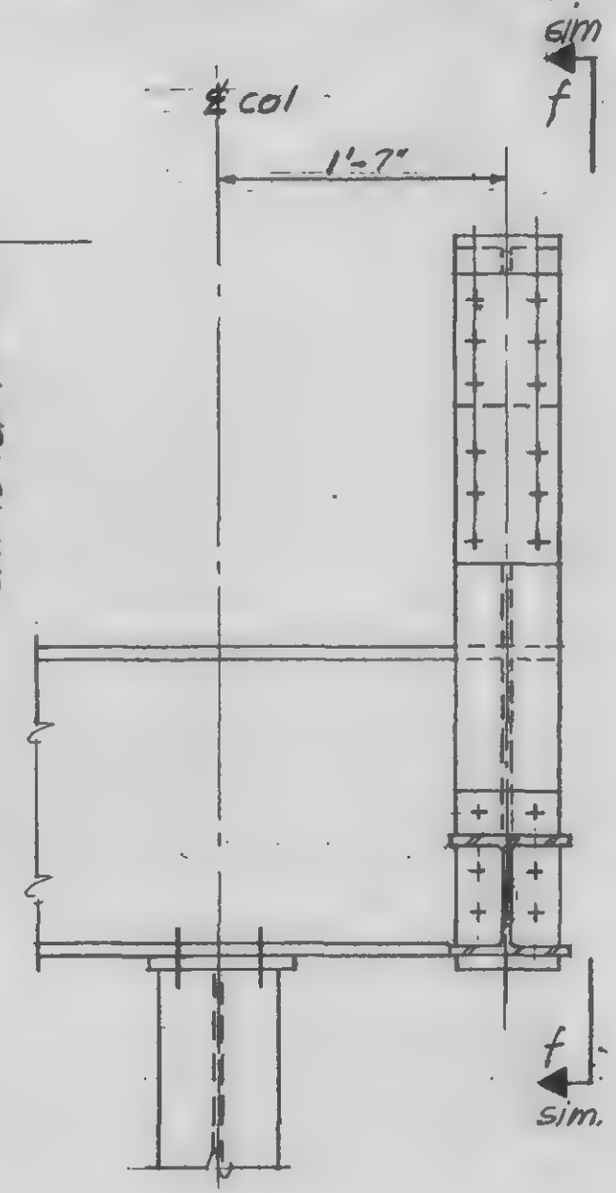

Detail 20-3F

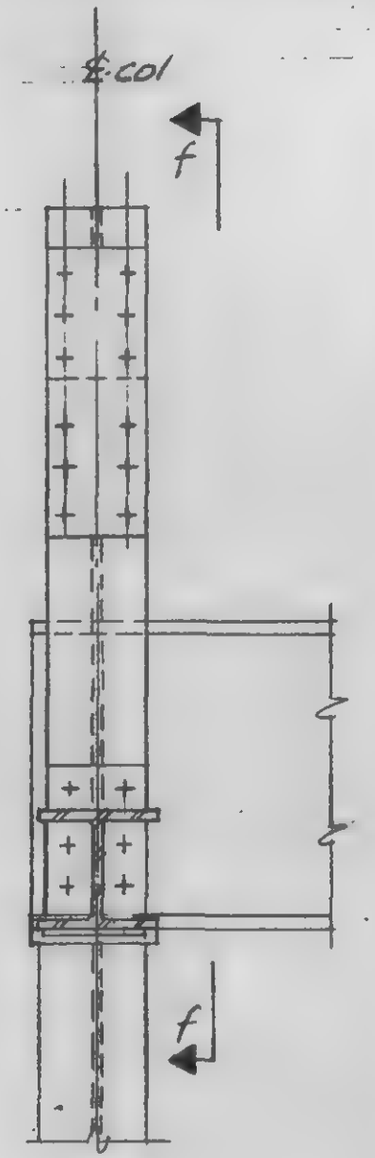

Detail 20-3E

LICENSED PROFESSIONAL ENGINEER — LESLIE E. ROBERTSON — No. 34360 — UNIVERSITY OF THE STATE OF NEW YORK

DESIGNED

DRAWN A.F.

REVIEWED

9-AB20-3.3

SKILLING, HELLE, CHRISTIANSEN, ROBERTSON — Structural & Mech. Engineers

PROJECT: THE WORLD TRADE CENTER | TITLE: [illegible] CONNECTION DETAILS - PH ROOF | DATE: 4-1-70

REVISIONS
8-20-70
10-4-71

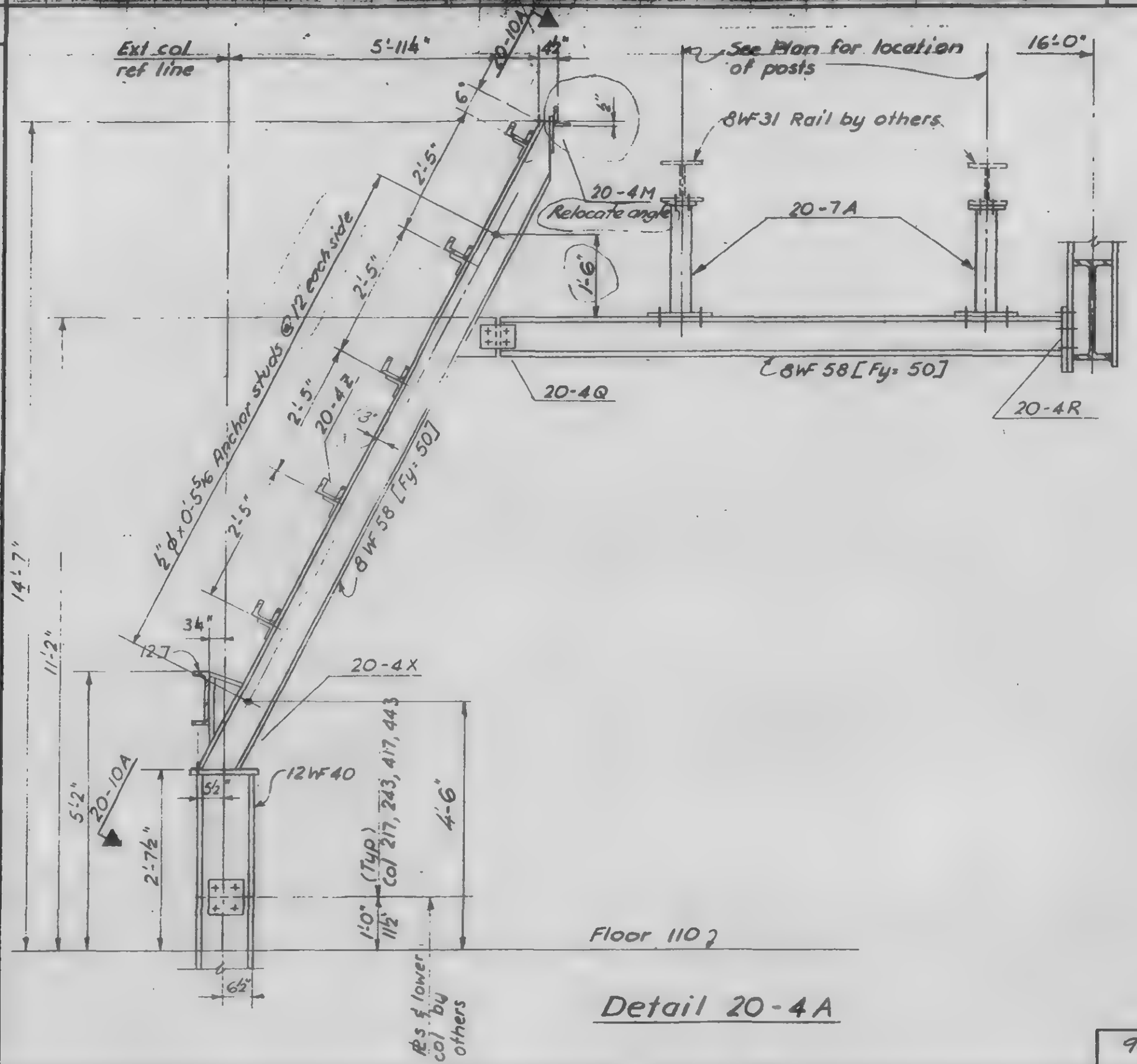

Detail 20-4A

DESIGNED

DRAWN
F. Smith

REVIEWED

9-A 20-4.1

PROJECT THE WORLD TRADE CENTER — CONNECTION DETAILS - PH ROOF — 9-A 20-4.2

REVISIONS

8-20-70
10-4-71

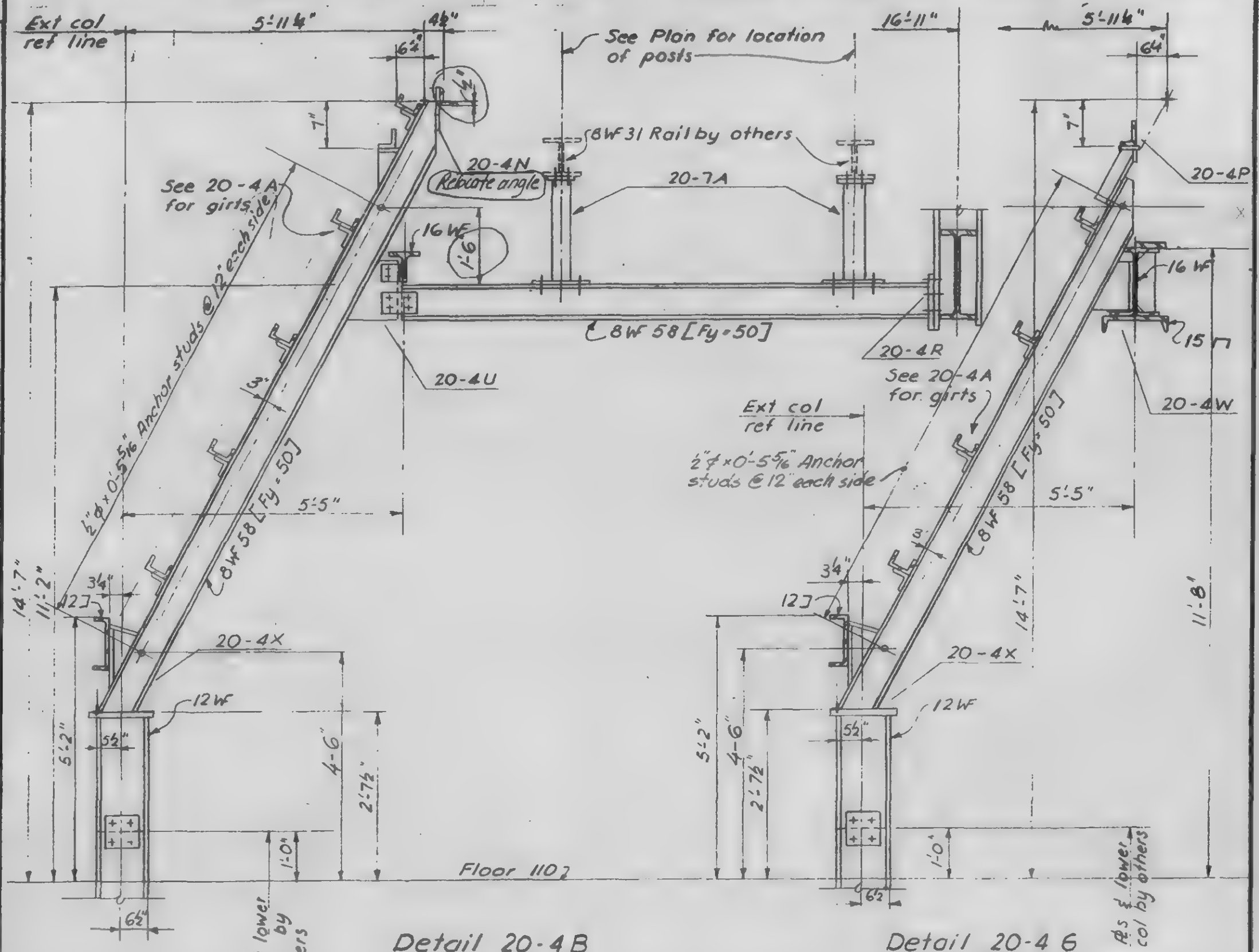

LICENSED PROFESSIONAL ENGINEER — LESLIE E. ROBERTSON — No 34960 — UNIVERSITY OF THE STATE OF NEW YORK

DRAWN F. Smith

REVIEWED

SKILLING, HELLE, CHRISTIANSEN, ROBERTSON — Structural & Civil Engineers

PROJECT: THE WORLD TRADE CENTER | TITLE: FL. 107-PH CONNECTION DETAILS - PH ROOF | DATE: 4-1-70

REVISIONS
8-20-70
10-4-71

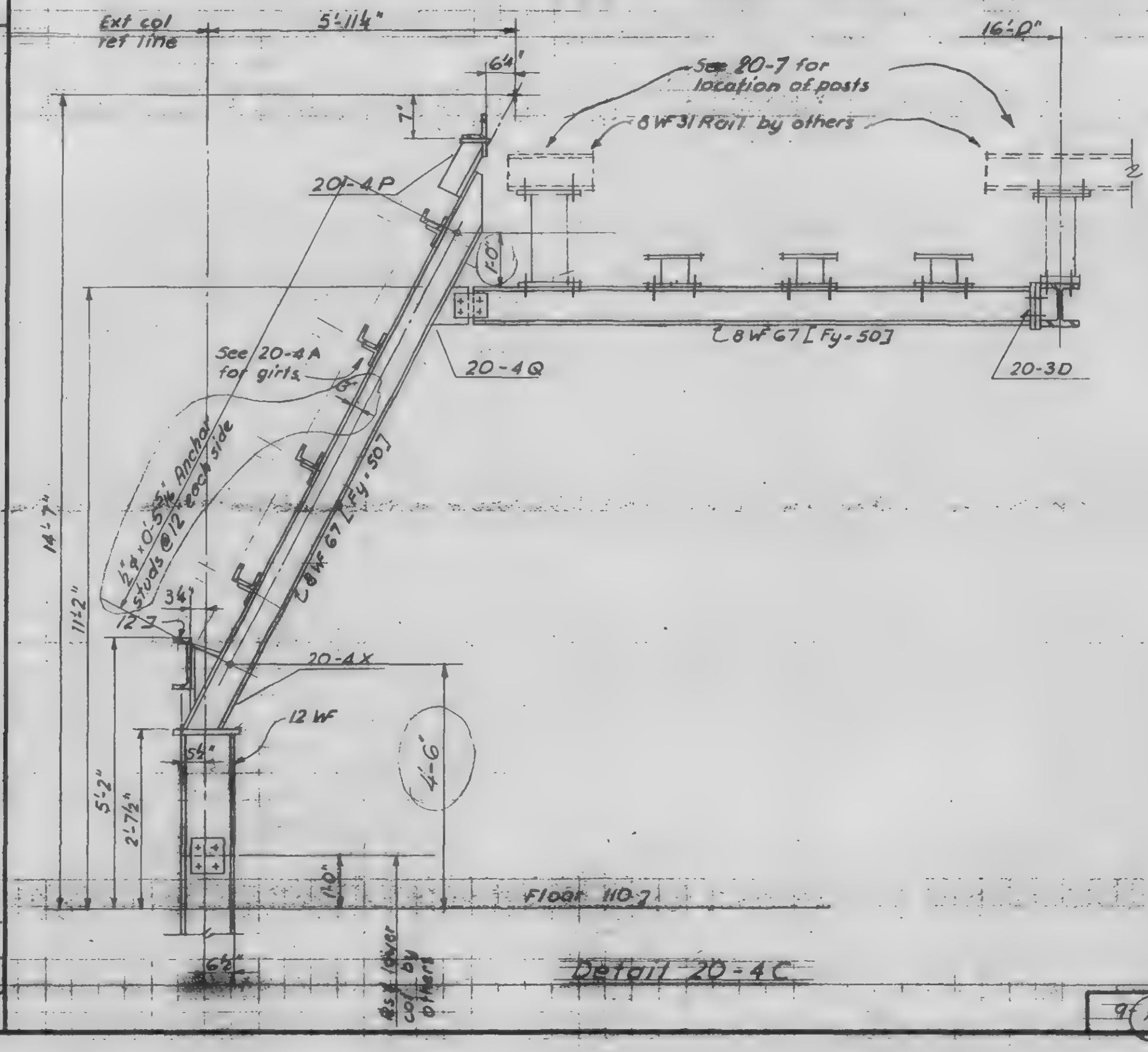

LICENSED PROFESSIONAL ENGINEER — LESLIE E. ROBERTSON — No. 54800 — UNIVERSITY OF THE STATE OF NEW YORK

DESIGNED

DRAWN L. Smith

REVIEWED

SKILLING, HELLE, CHRISTIANSEN, ROBERTSON — Structural & Civil Engineers

PROJECT: THE WORLD TRADE CENTER | TITLE: FL. 107-PH, CONNECTION DETAILS - PH ROOF | DATE: 4-1-70

REVISIONS
8-20-70
10-4-71

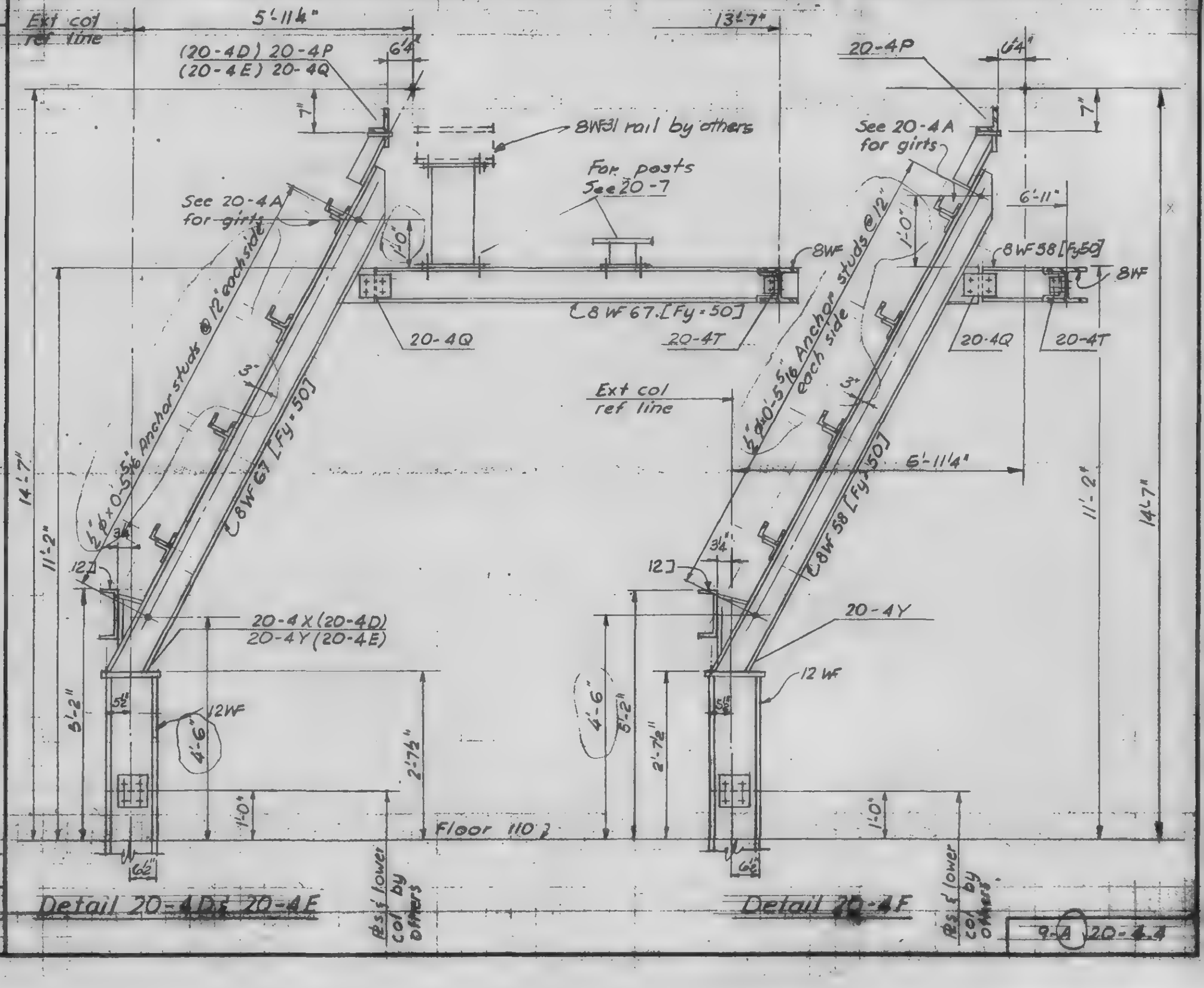

LICENSED PROFESSIONAL ENGINEER
LESLIE E. ROBERTSON
No. 34860
UNIVERSITY OF THE STATE OF NEW YORK

DESIGNED

DRAWN: E. Smith

9-A | 20-4.4

SKILLING, HELLE, CHRISTIANSEN, ROBERTSON — Structural & Civil Engineers

PROJECT: THE WORLD TRADE CENTER | TITLE: FL 107 - PH, CONNECTION DETAILS - PH ROOF | DATE: 8-20-70

REVISIONS

10/4/71

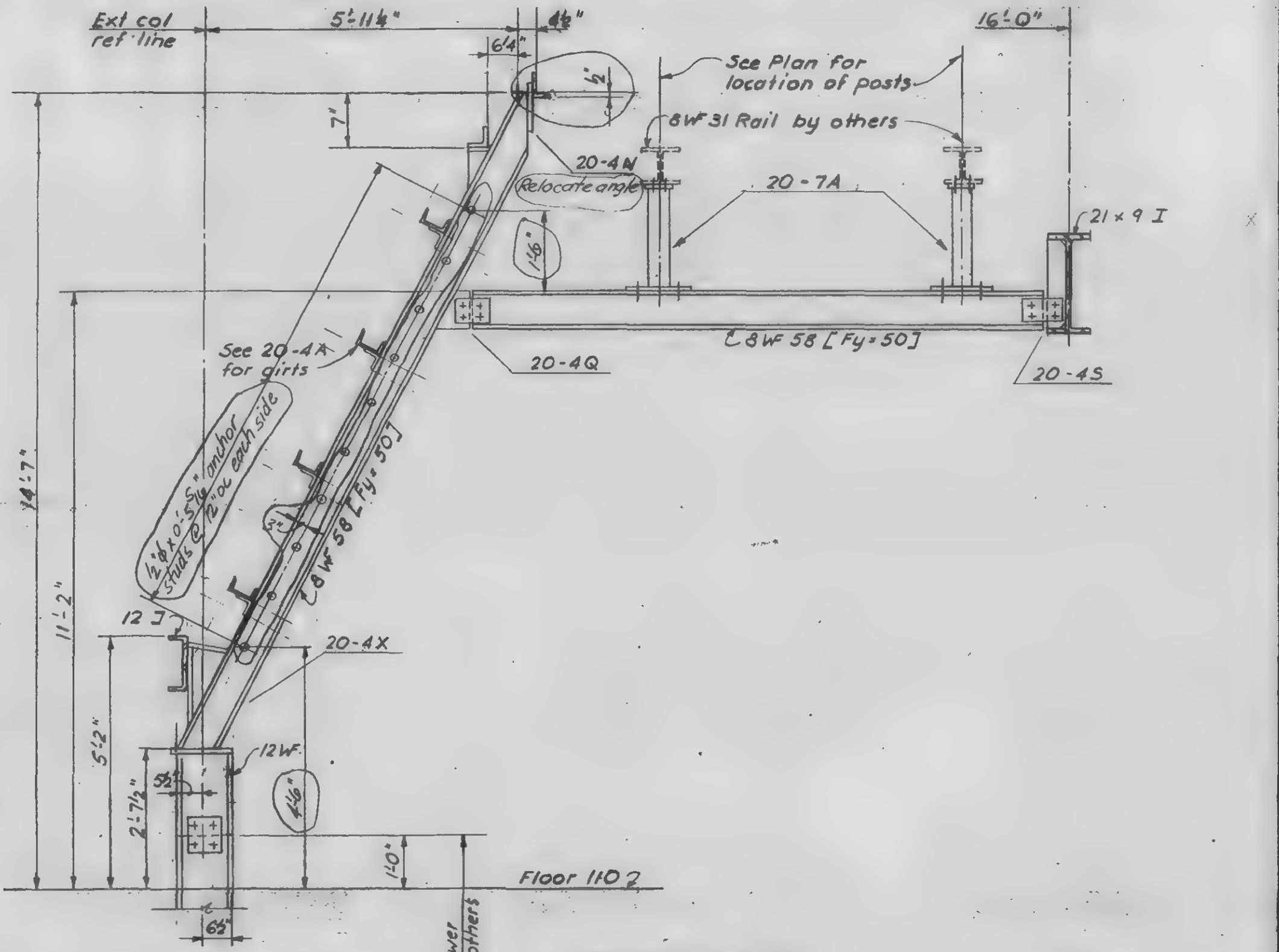

Detail 20-4J

LICENSED PROFESSIONAL ENGINEER — LESLIE E. ROBERTSON — No. 54860 — STATE OF NEW YORK

DESIGNED

DRAWN: F. Smith

REVIEWED

9-(A)20-4.5

SKILLING, HELLE, CHRISTIANSEN, ROBERTSON — Structural & Civil Engineers

PROJECT: THE WORLD TRADE CENTER | TITLE: FL 107-PH, CONNECTION DETAILS - PH ROOF | DATE: 8-20-70

REVISIONS

10/4/71

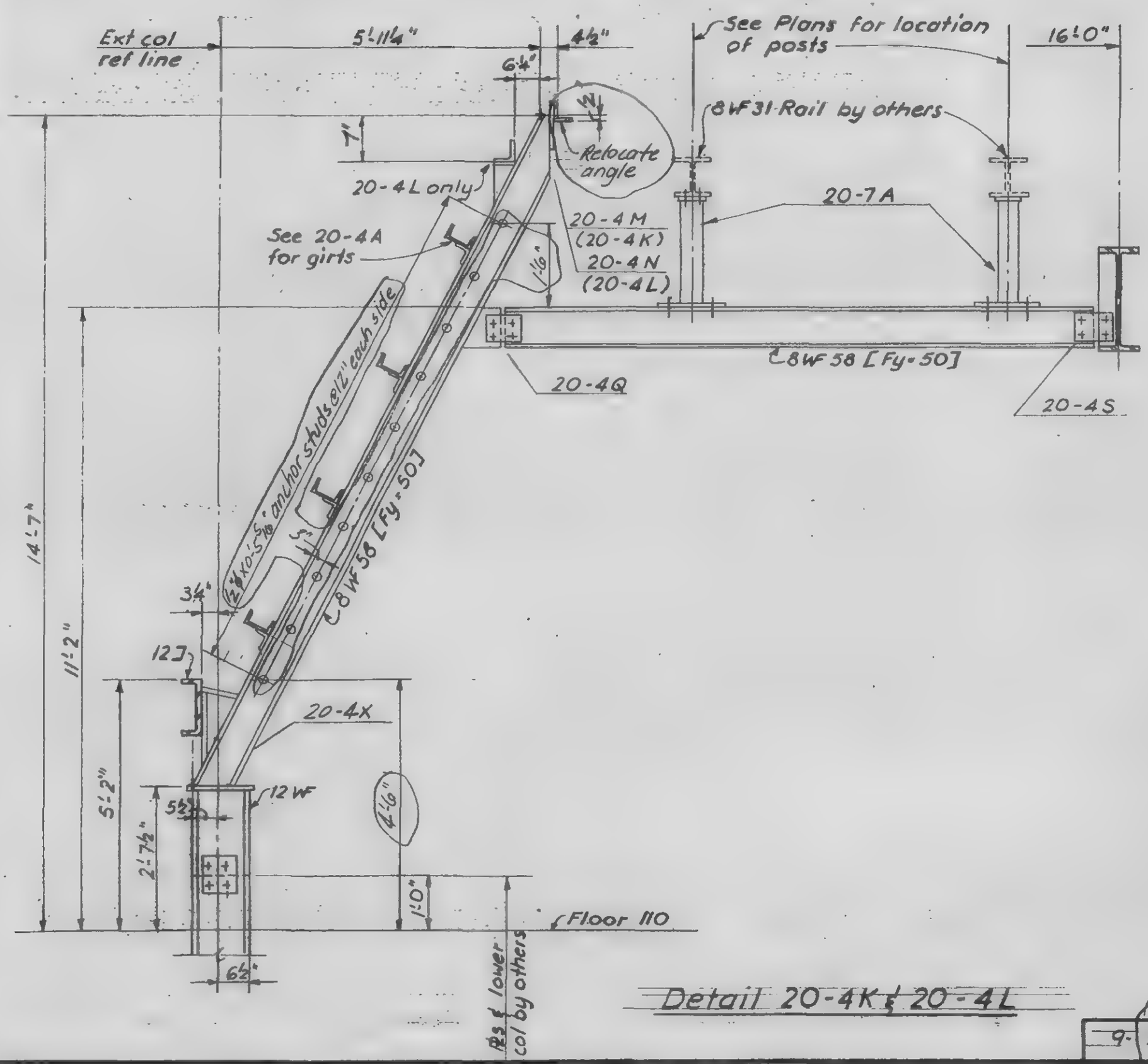

Detail 20-4K & 20-4L

9-A20-4.6

LICENSED PROFESSIONAL ENGINEER — LESLIE E. ROBERTSON — No 34980 — UNIVERSITY OF THE STATE OF NEW YORK

DESIGNED

F. Smith

DRAWN

CHECKED

THE WORLD TRADE CENTER — EL 107-PH CONNECTION DETAILS - PH ROOF

REVISIONS

8-20-70
10-4-71

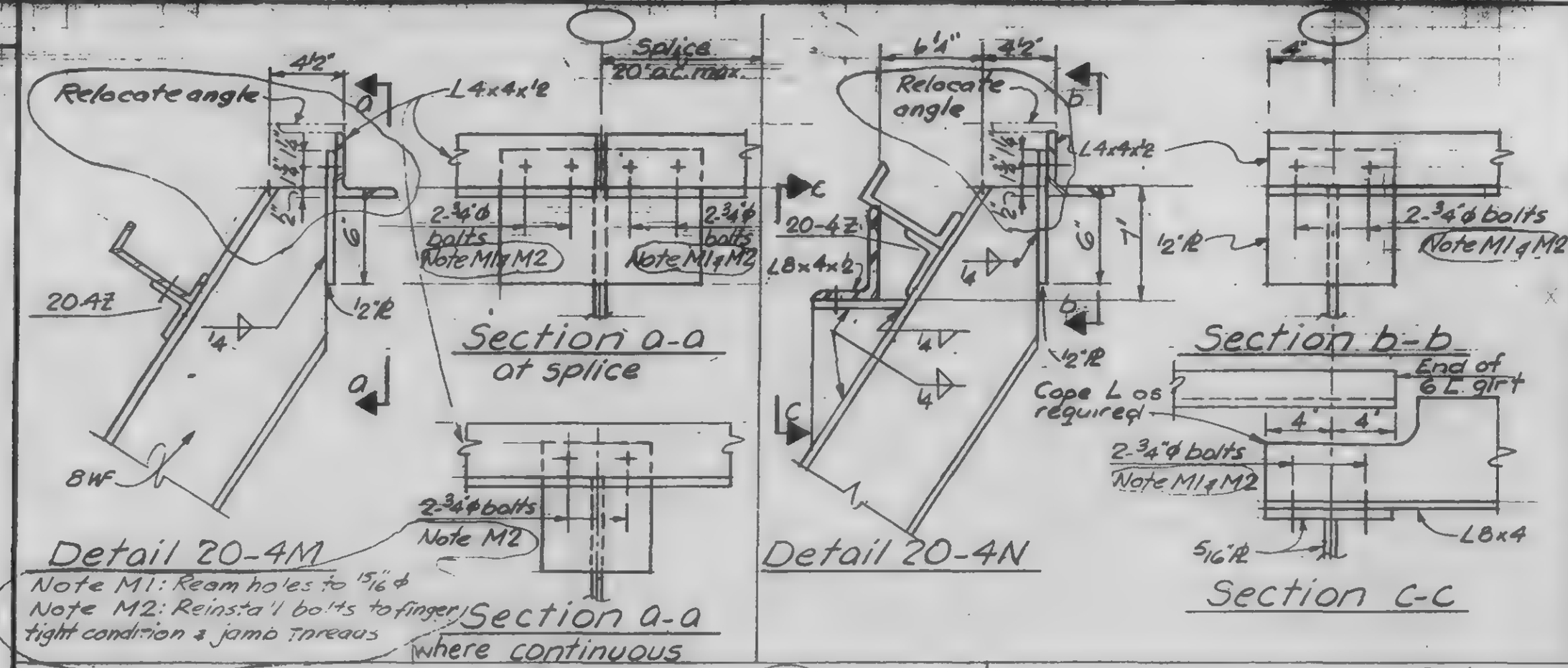

LICENSED PROFESSIONAL ENGINEER
LESLIE E. ROBERTSON
No 34360
UNIVERSITY OF THE STATE OF NEW YORK

DESIGNED

DRAWN
A. FRANQUI

REVIEWED

9-AB20-4.7

SKILLING, HELLE, CHRISTIANSEN, ROBERTSON — Structural & Civil Engineers

PROJECT THE WORLD TRADE CENTER | TITLE FL 107-PH CONNECTION DETAILS - PH ROOF | DATE 4-1-70

REVISIONS

8-20-70

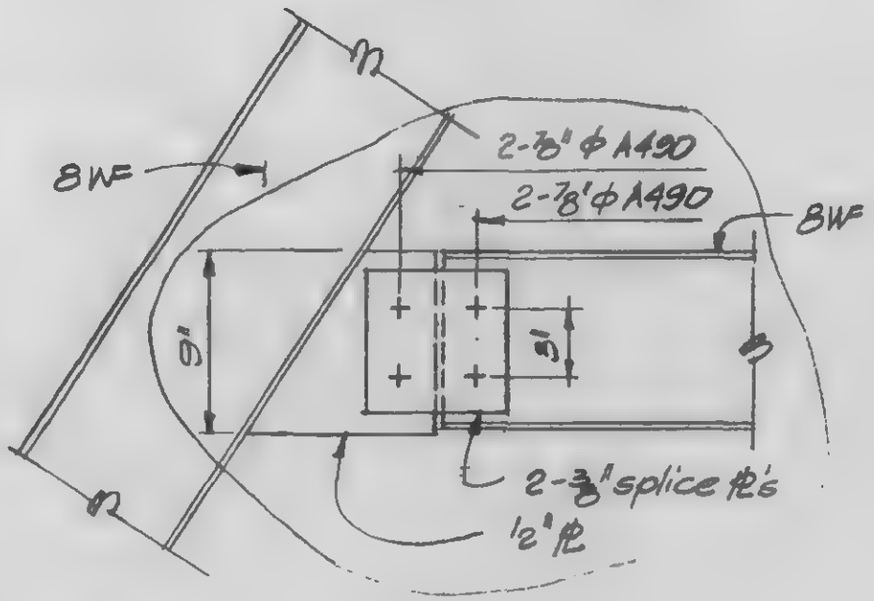

Detail 20-4Q

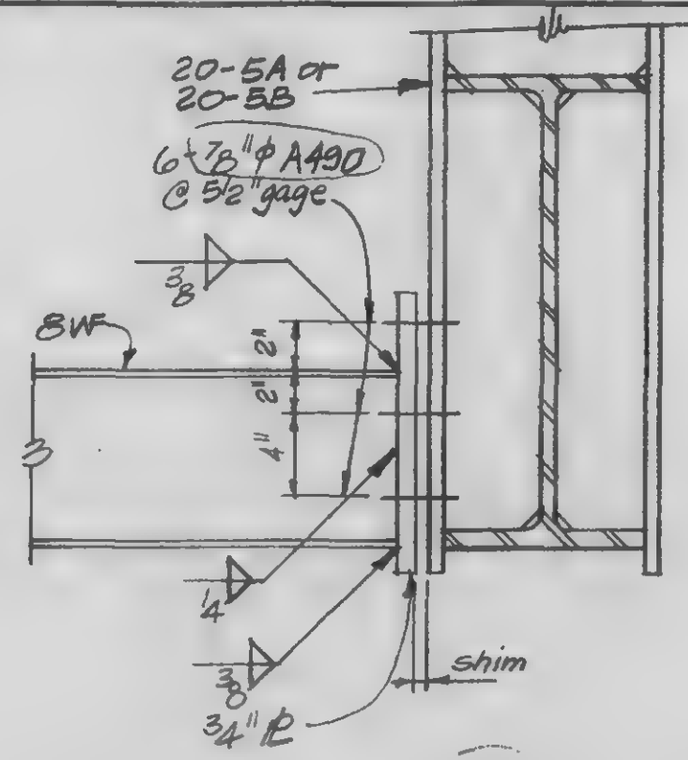

Detail 20-4R

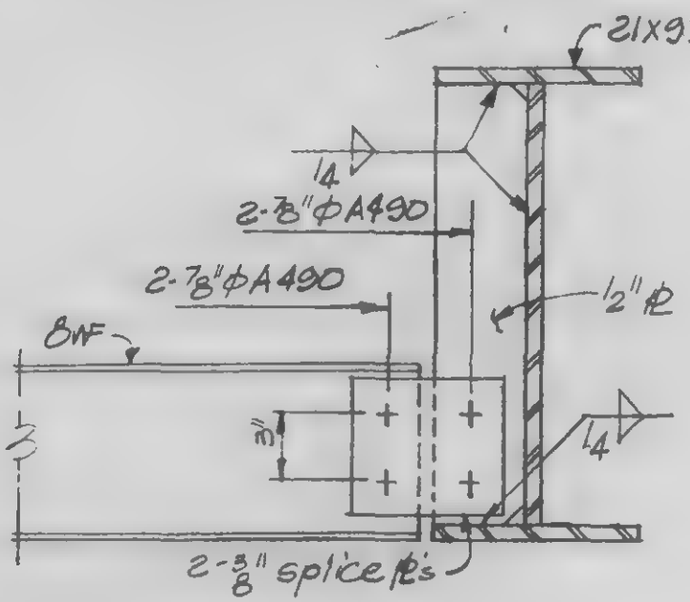

Detail 20-4S

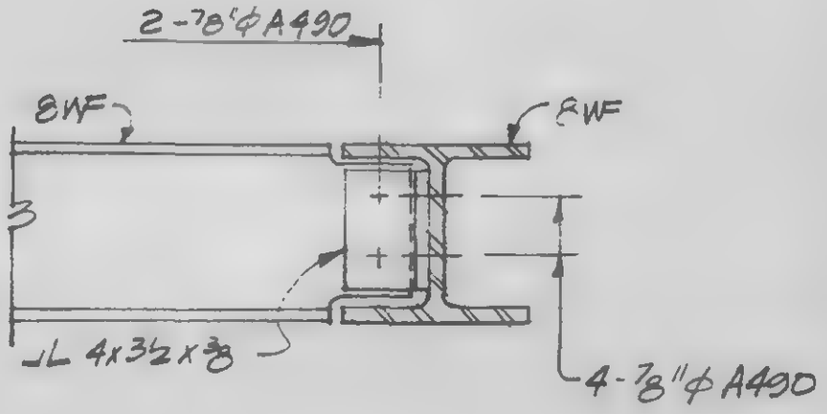

Detail 20-4T

LICENSED PROFESSIONAL ENGINEER — LESLIE E. ROBERTSON — No. 34360 — UNIVERSITY OF THE STATE OF NEW YORK

DESIGNED

DRAWN C. Ozpi

REVIEWED

9-AB20-4.8

SKILLING, HELLE, CHRISTIANSEN, ROBERTSON — Structural & Civil Engineers

PROJECT: THE WORLD TRADE CENTER | TITLE: FL 107-PH CONNECTION DETAILS-PH ROOF | DATE: 8-20-70

REVISIONS

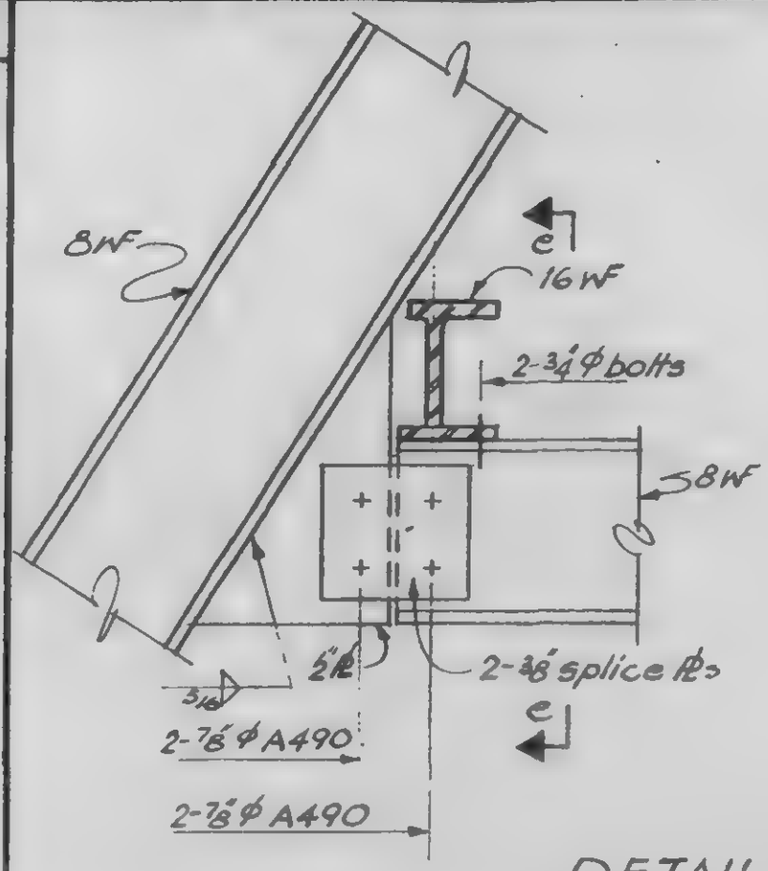

DETAIL 20-4 U

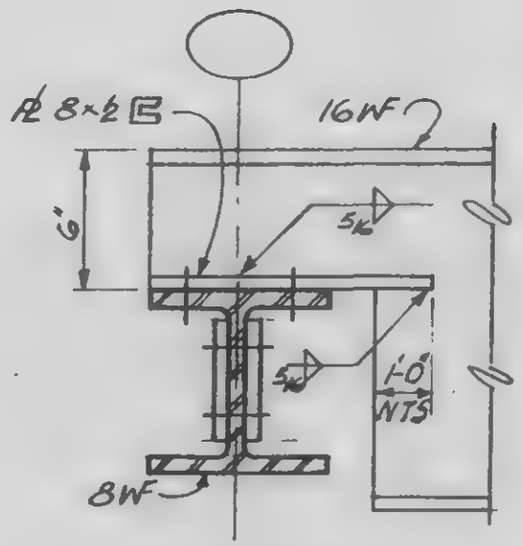

Section e-e

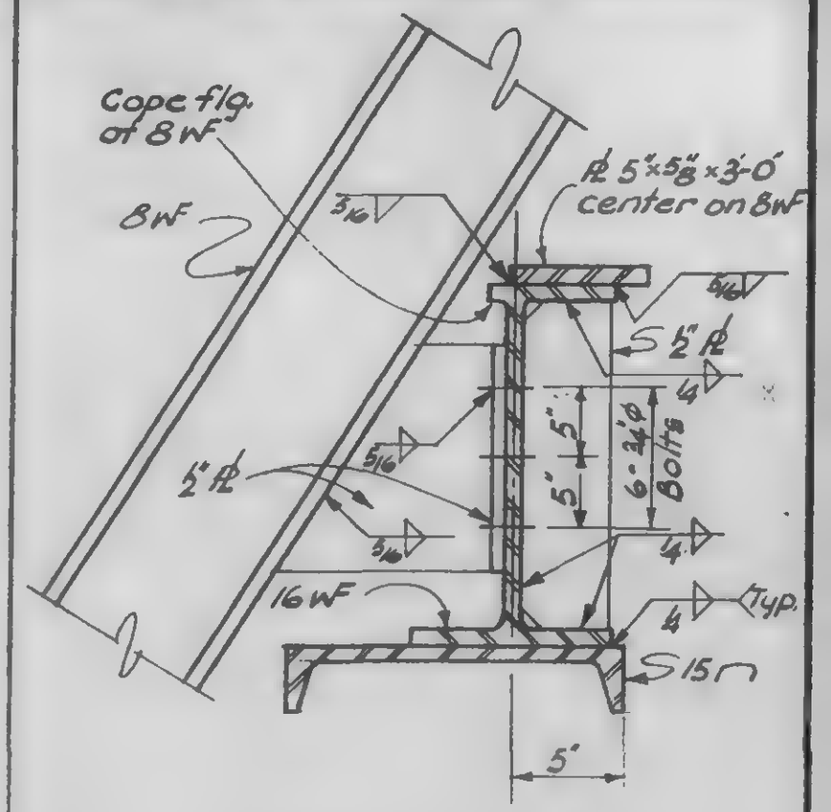

DETAIL 20-4 W

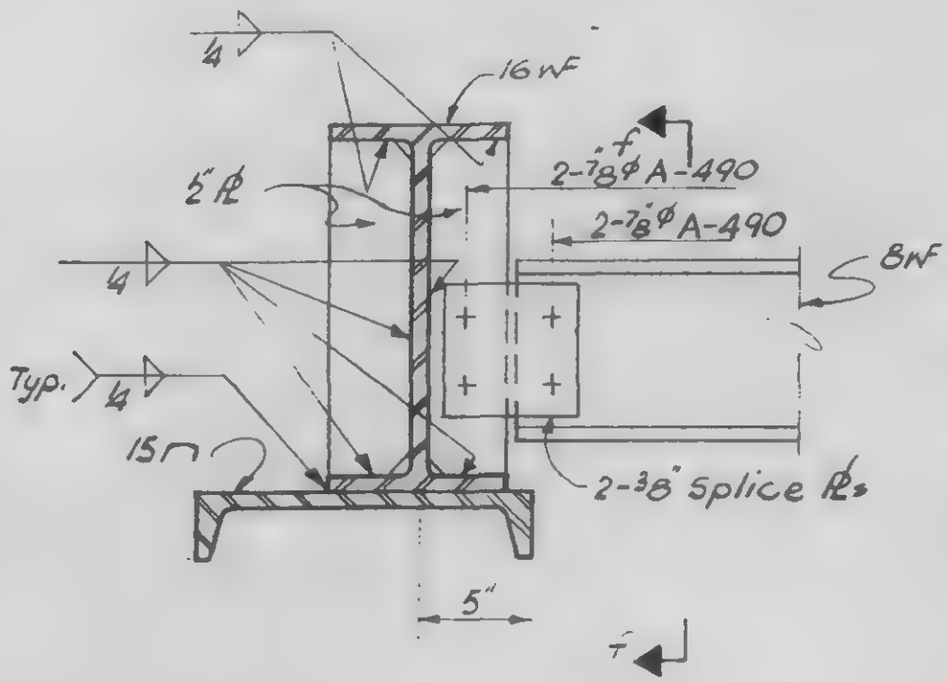

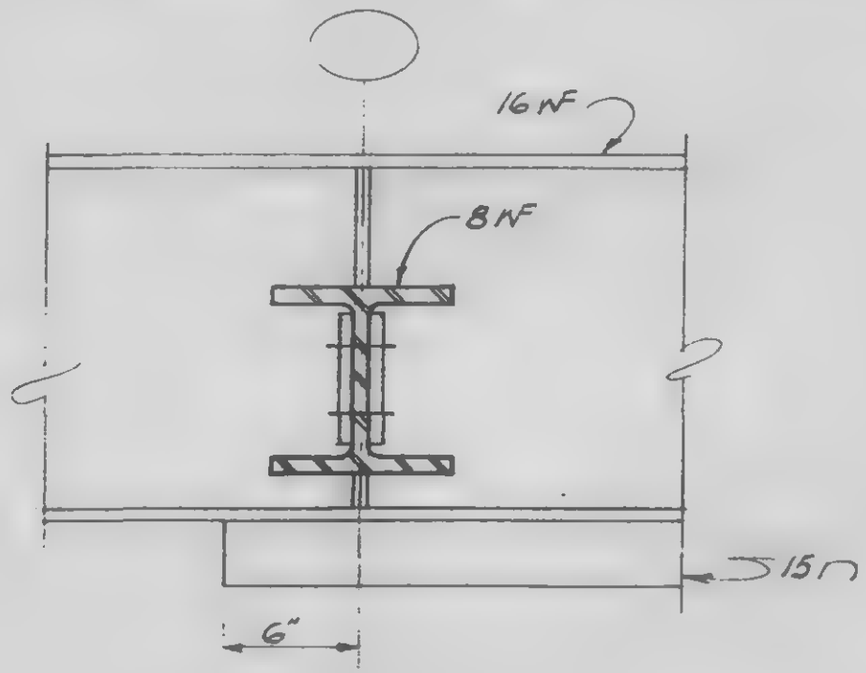

Section f-f

DETAIL 20-4V

LICENSED PROFESSIONAL ENGINEER — LESLIE E. ROBERTSON — No. 34360 — UNIVERSITY OF THE STATE OF NEW YORK

DESIGNED

DRAWN D. Huggins

REVIEWED

9-AB20-4.9

SKILLING, HELLE, CHRISTIANSEN, ROBERTSON — Structural & Civil Engineers

PROJECT: THE WORLD TRADE CENTER | TITLE: FL 107 - PH CONNECTION DETAILS - PH. ROOF | DATE: 4 - 1 - 70

REVISIONS
8-20-70
12-21-70
6-30-71
10-4-71

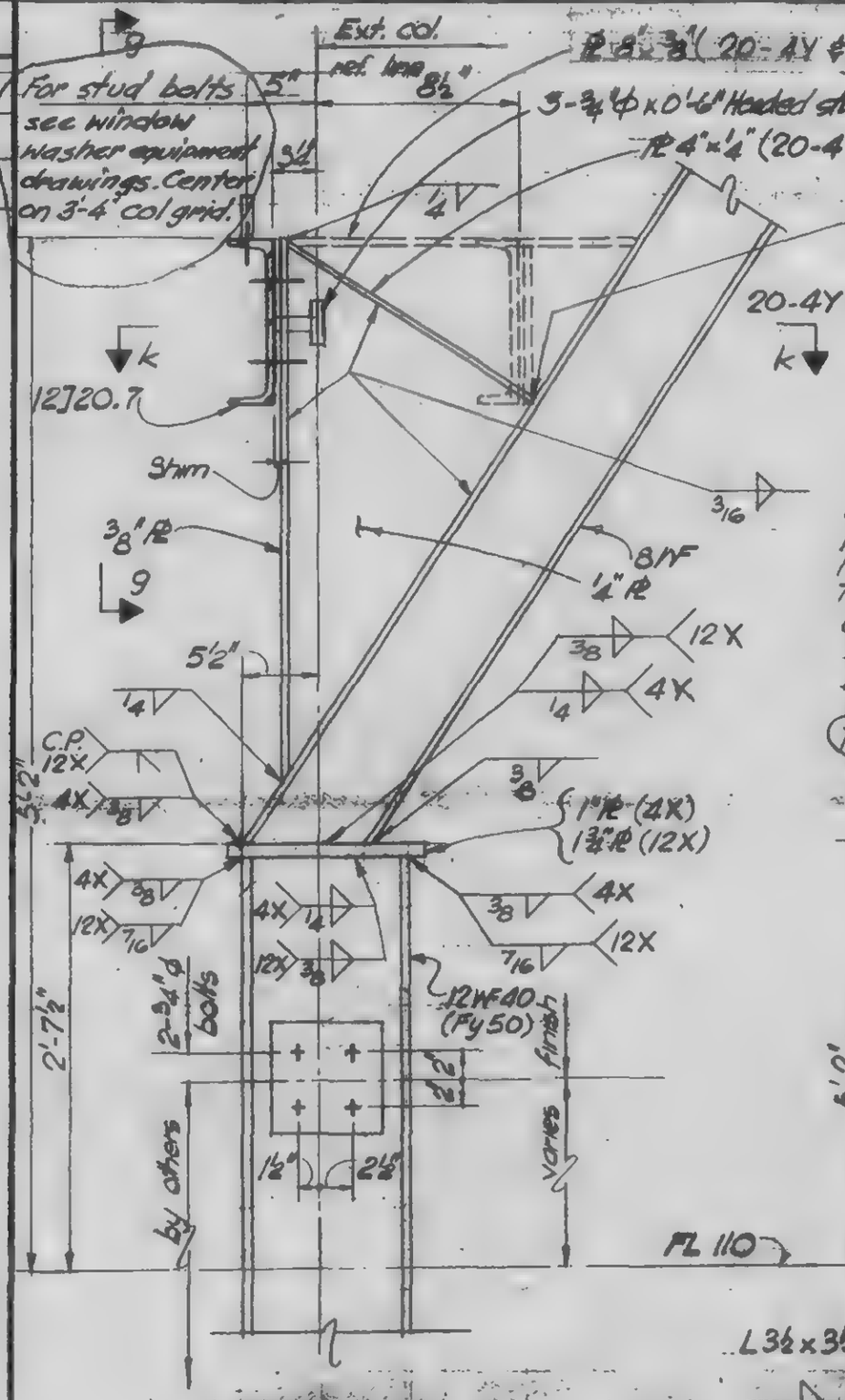

DETAIL 20-4X & 12X

DETAIL 20-4Y (same as 4X except as noted)

DETAIL 20-12Y (same as 12X except as noted)

Section h-h
See Key Plan 20-4.11 for location

LICENSED PROFESSIONAL ENGINEER — LESLIE E. ROBERTSON — No. 34360 — UNIVERSITY OF THE STATE OF NEW YORK

DESIGNED

DRAWN: M. Clarke

REVIEWED

9-AB 20-4.10

SKILLING, HELLE, CHRISTIANSEN, ROBERTSON — Structural & Civil Engineers

PROJECT: THE WORLD TRADE CENTER | TITLE: FL.107-PH. CONNECTION DETAILS - PH. ROOF | DATE: 4-1-70

REVISIONS
8-20-70
10/4/71

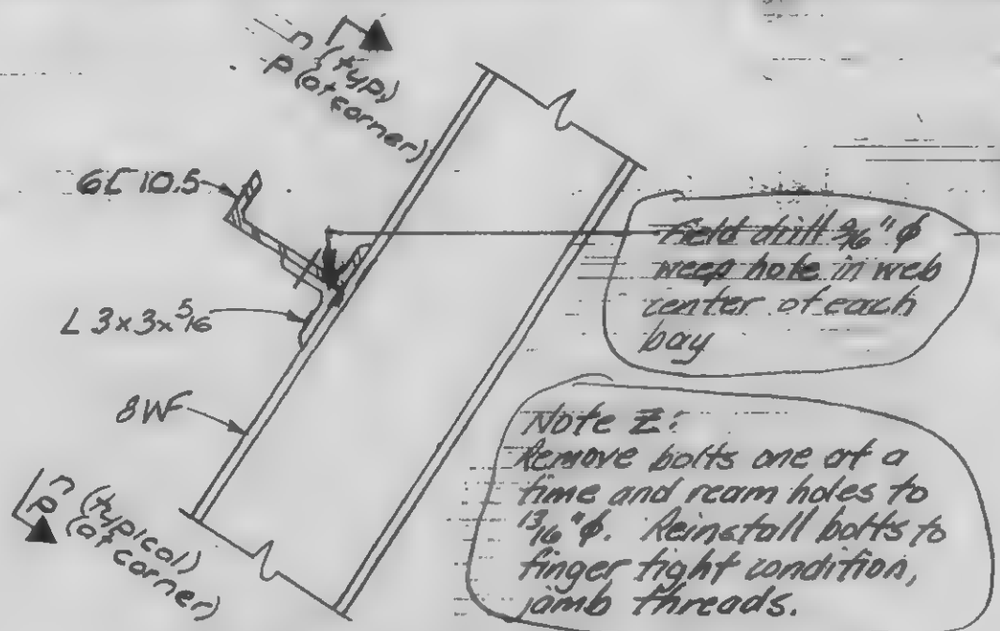

Field drill 9/16" ϕ weep hole in web center of each bay

Note Z:
Remove bolts one at a time and ream holes to 13/16" ϕ. Reinstall bolts to finger tight condition, jamb threads.

Detail 20-4Z

For balance of detail
See 9-AB20-4.12

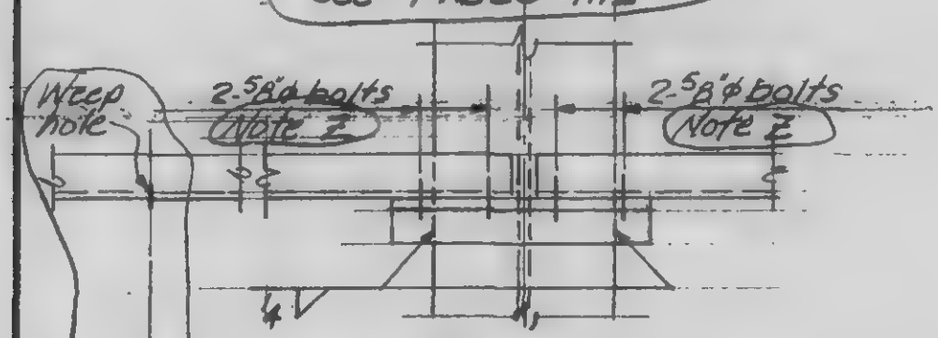

Section n-n
at splice 20'-0" o.c. max.

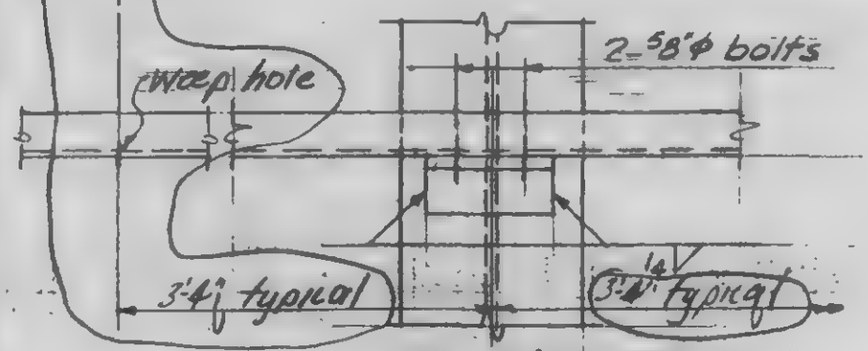

Section n-n
where continuous

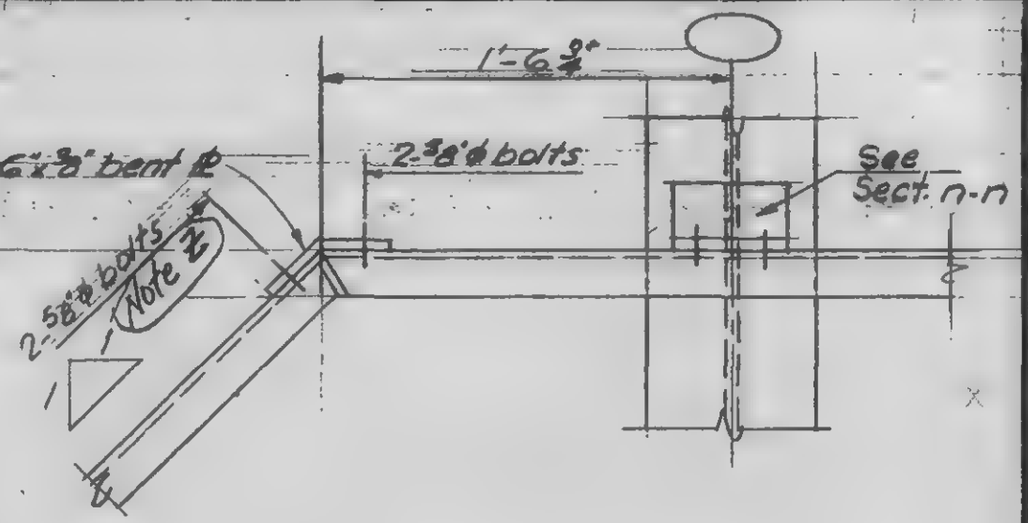

Section p-p

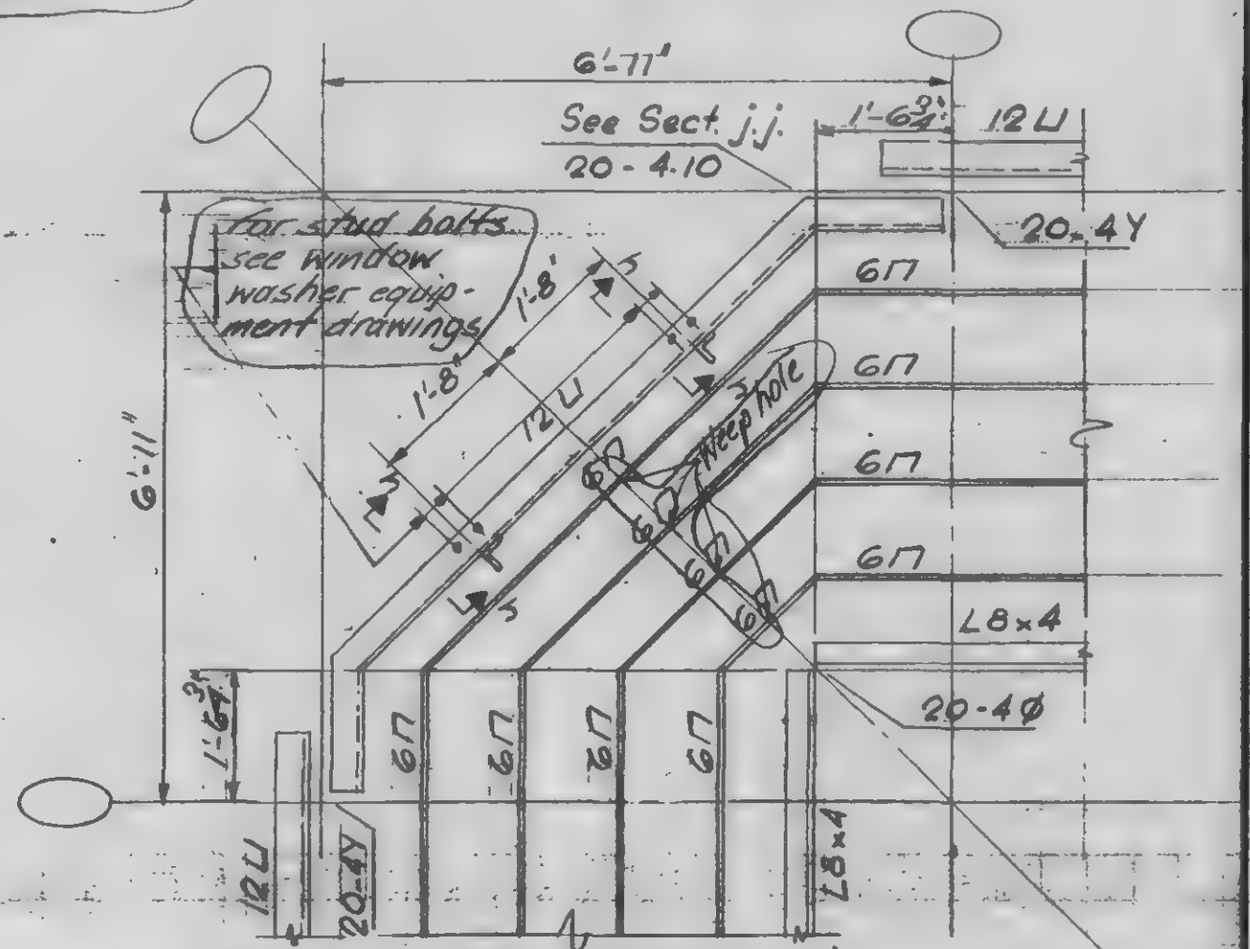

Key Plan
at corner

LICENSED PROFESSIONAL ENGINEER — LESLIE E. ROBERTSON — No. 34960 — UNIVERSITY OF THE STATE OF NEW YORK

DESIGNED

DRAWN
A. ERANQUI

REVIEWED

9-AB20-4.11

SKILLING, HELLE, CHRISTIANSEN, ROBERTSON — Structural & Civil Engineers

PROJECT: THE WORLD TRADE CENTER — TITLE: DETAIL [illegible] — DATE

REVISIONS

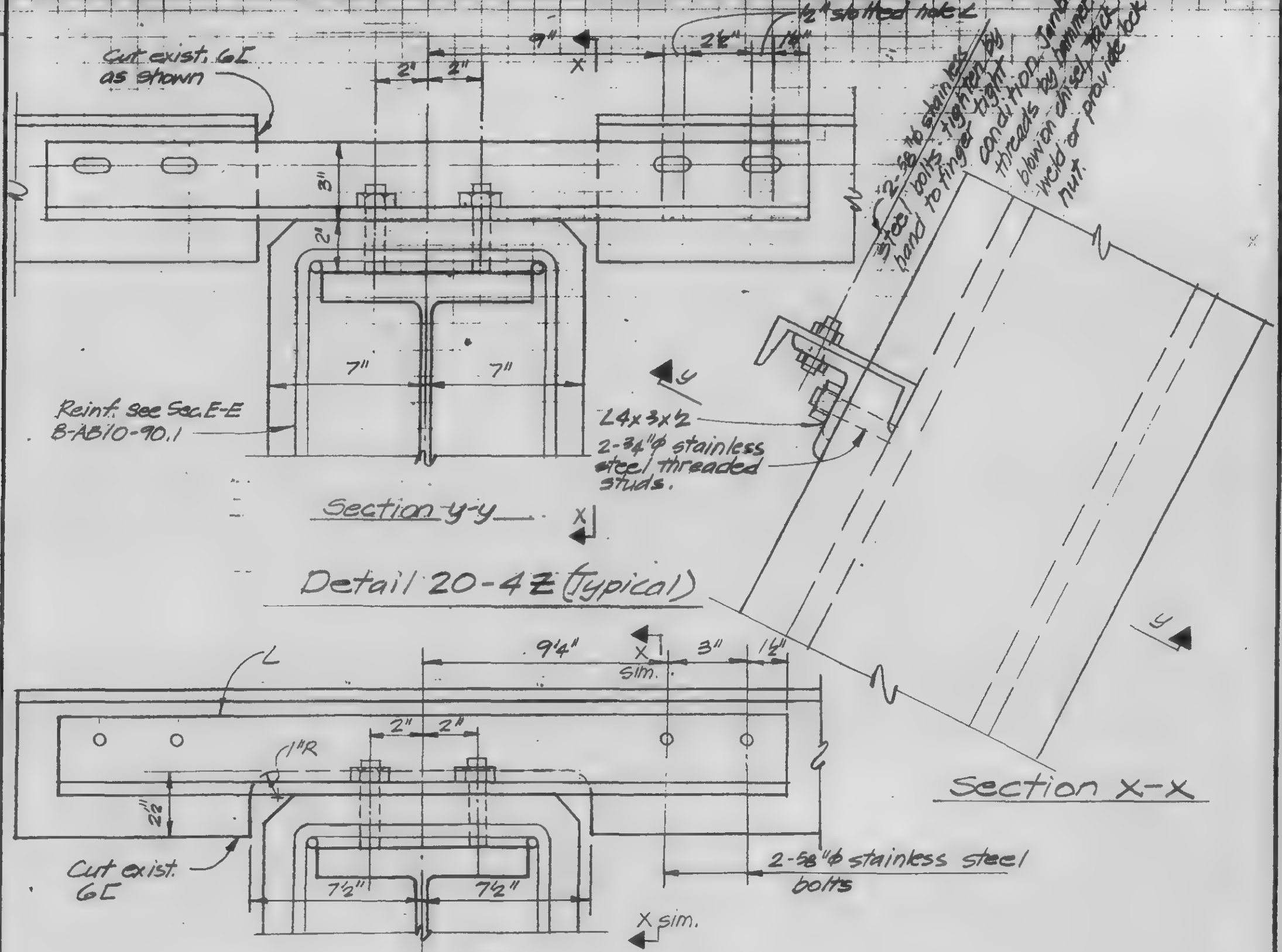

Detail 20-4Z at Cols.

101, 159 201, 259, 301, 359, 401, 459

P.P. 7/9/71

LICENSED PROFESSIONAL ENGINEER — LESLIE E. ROBERTSON — No 34360 — UNIVERSITY OF THE STATE OF NEW YORK

DESIGNED

DRAWN

REVIEWED

9-AB20-4.12

SKILLING, HELLE, CHRISTIANSEN, ROBERTSON — Structural & Civil Engineers

PROJECT: THE WORLD TRADE CENTER | TITLE: DETAIL AT 6E - PLUG TO PM | DATE

REVISIONS

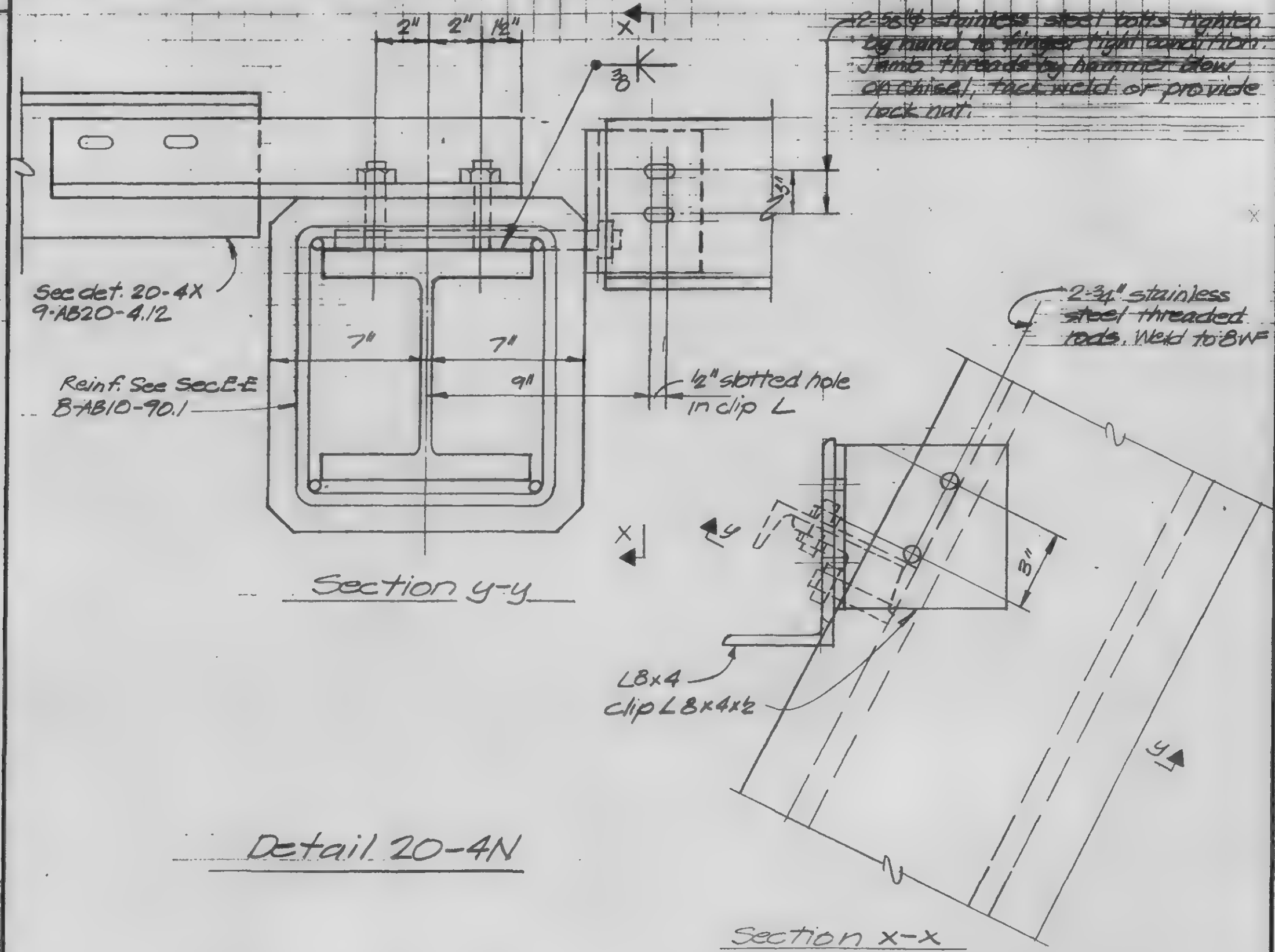

Detail 20-4N

I.P. 7/9/71

LICENSED PROFESSIONAL ENGINEER
LESLIE E. ROBERTSON
No 34360
UNIVERSITY OF THE STATE OF NEW YORK

DESIGNED

DRAWN

REVIEWED

9-AB20-4.13

SKILLING, HELLE, CHRISTIANSEN, ROBERTSON — Structural & Civil Engineers

PROJECT: THE WORLD TRADE CENTER | TITLE: Fl. 107-PH CONNECTION DETAIL - PH ROOF | DATE: 4-1-70

REVISIONS

7/8/70

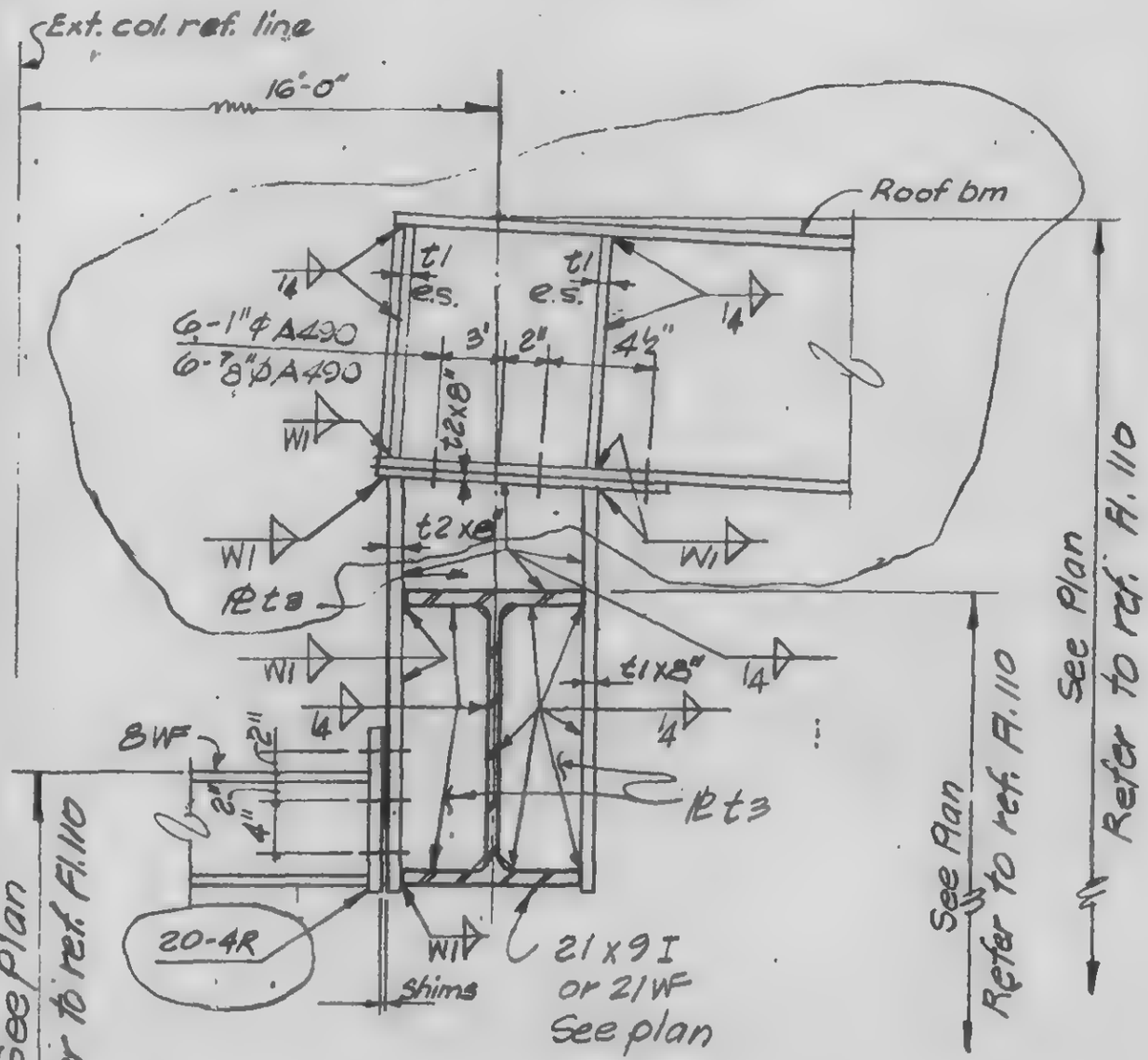

DETAIL 20-5A & 20-5B

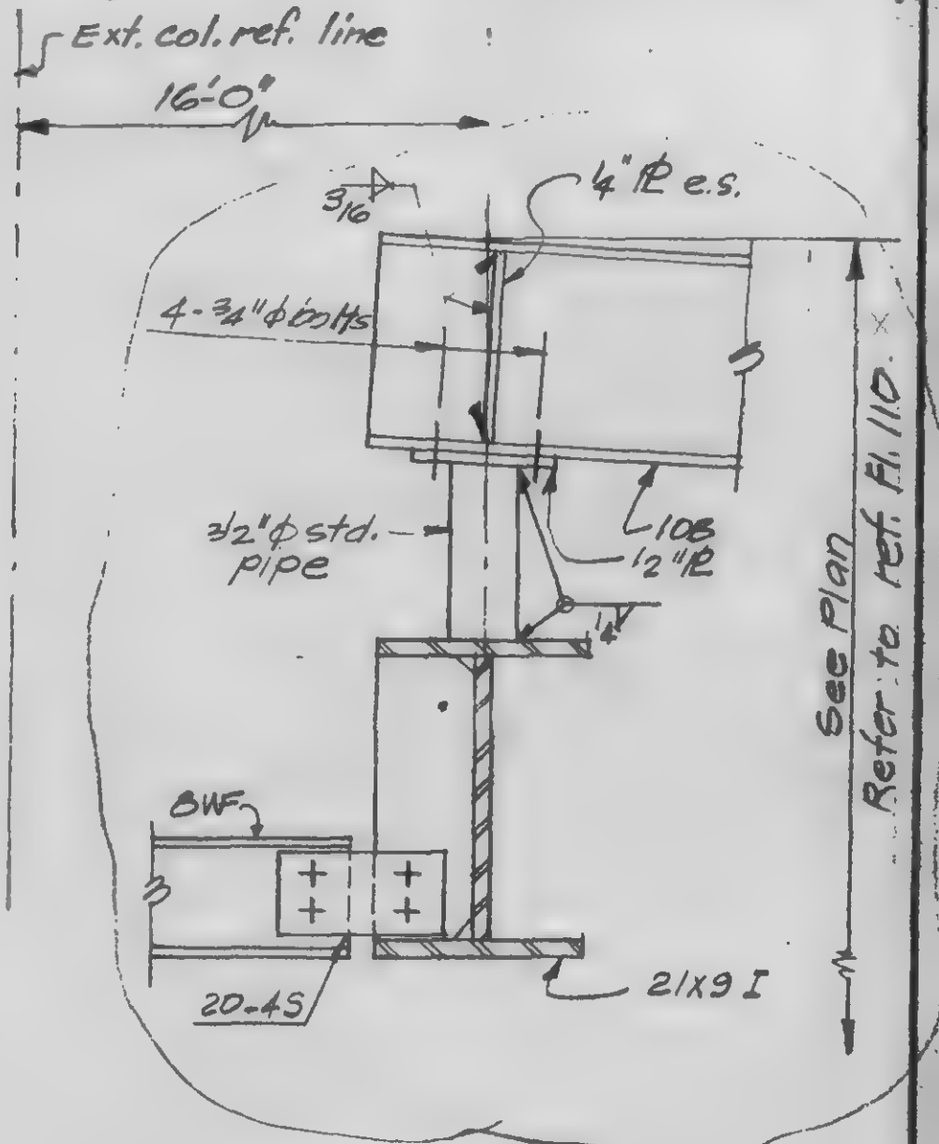

Detail 20-5C

Detail	Roof Beam See Plan	PL t1	PL t2	PL t3	Weld W1
20-5A	16WF	½"	⅝"	½"	⅝"
20-5B	12WF	½"	¾"	⅜"	5/16"

LICENSED PROFESSIONAL ENGINEER — LESLIE E. ROBERTSON — No 34360 — UNIVERSITY OF THE STATE OF NEW YORK

SIGNED

DRAWN: D. Huggins

REVIEWED

9-AB20-5

SKILLING, HELLE, CHRISTIANSEN, ROBERTSON — Structural & Civil Engineers

PROJECT THE WORLD TRADE CENTER | TITLE EL.107- P.H, CONNECTION DETAILS-PH ROOF | DATE 4-1-70

REVISIONS

6-18-70

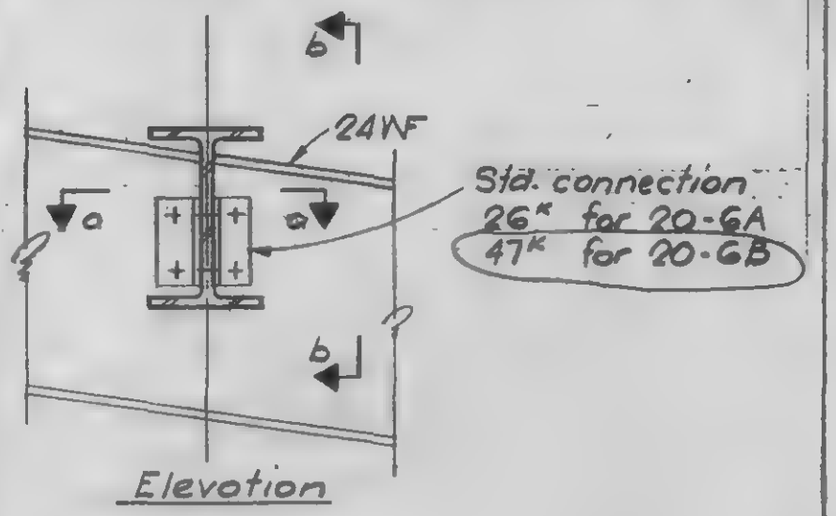

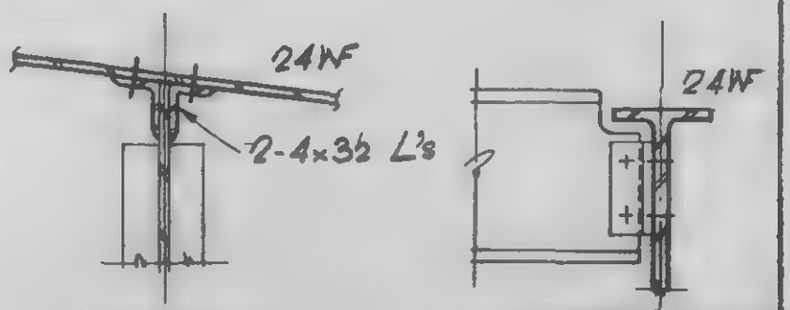

DETAIL 20-6A & 20-6B

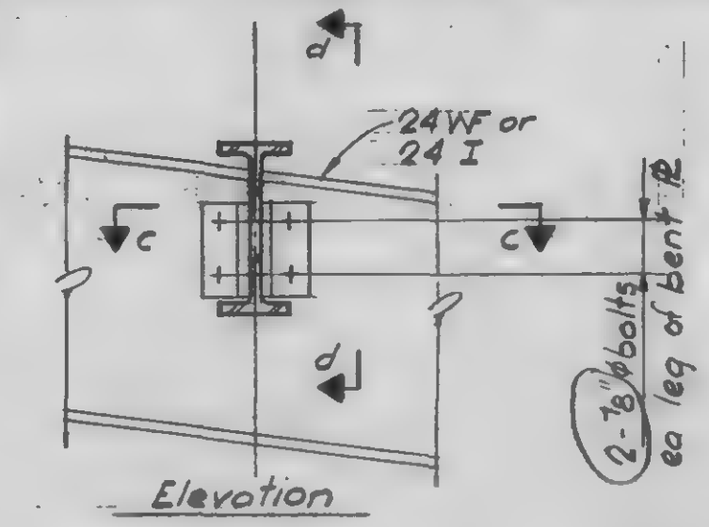

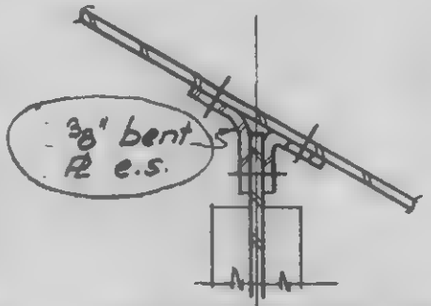

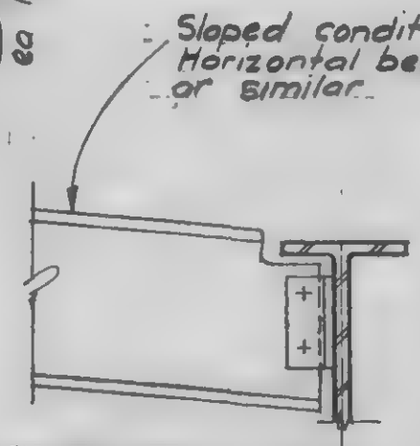

DETAIL 20-6C & 20-6D

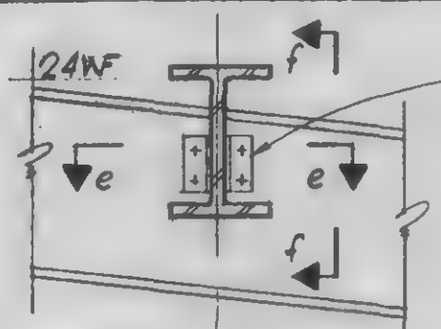

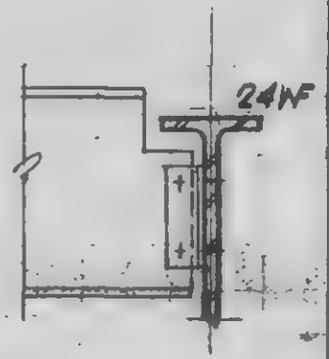

DETAIL 20-6E

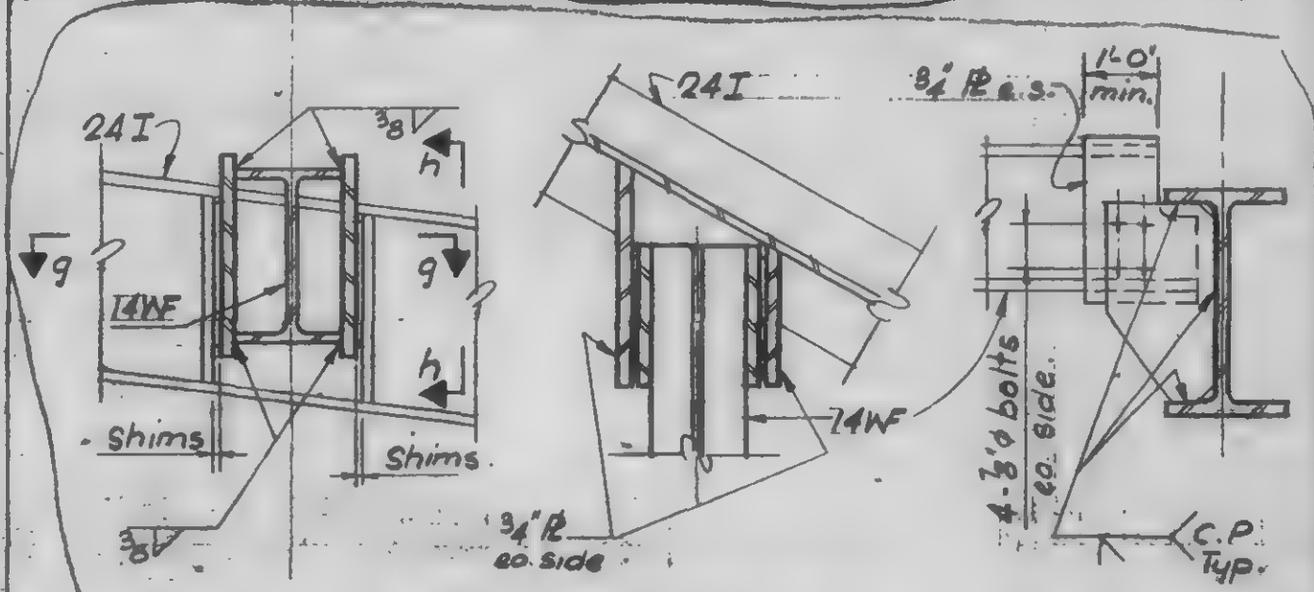

DETAIL 20-6F

LICENSED PROFESSIONAL ENGINEER
LESLIE E. ROBERTSON
No. 34360
UNIVERSITY OF THE STATE OF NEW YORK

DESIGNED

DRAWN T. Terrelonge

REVIEWED

9-AB20-6

SKILLING, HELLE, CHRISTIANSEN, ROBERTSON — Structural & Civil Engineers

PROJECT: THE WORLD TRADE CENTER | TITLE: FL 107-PH PART PLAN - PH ROOF | DATE: 8-20-70

REVISIONS

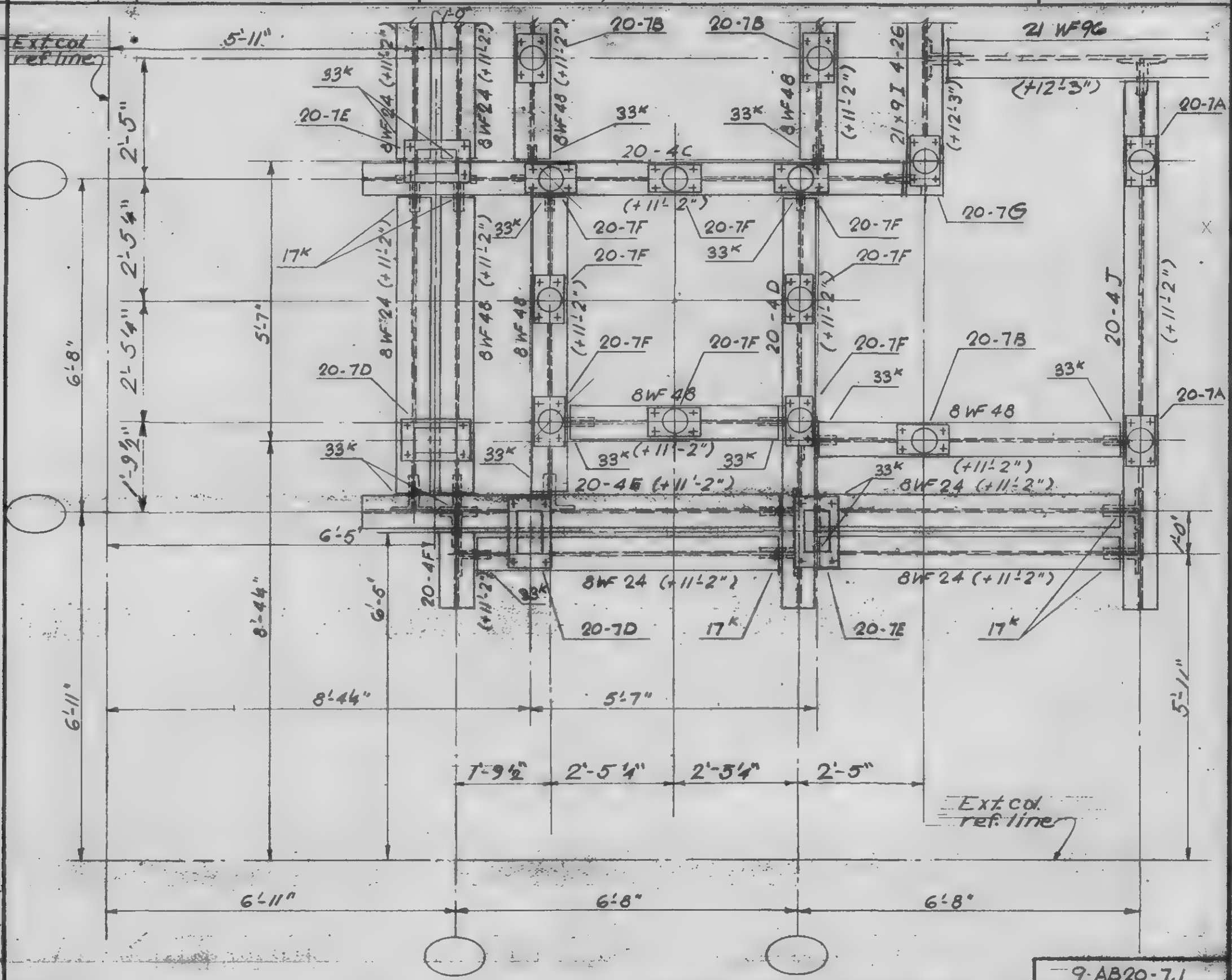

DESIGNED

DRAWN: E. Smith

REVIEWED

9-AB20-7.1

SKILLING, HELLE, CHRISTIANSEN, ROBERTSON — Structural & Civil Engineers

PROJECT: THE WORLD TRADE CENTER | TITLE: FL. 107-PH CONNECTION DETAILS - PH ROOF | DATE: 4-1-70

REVISIONS

8-20-70

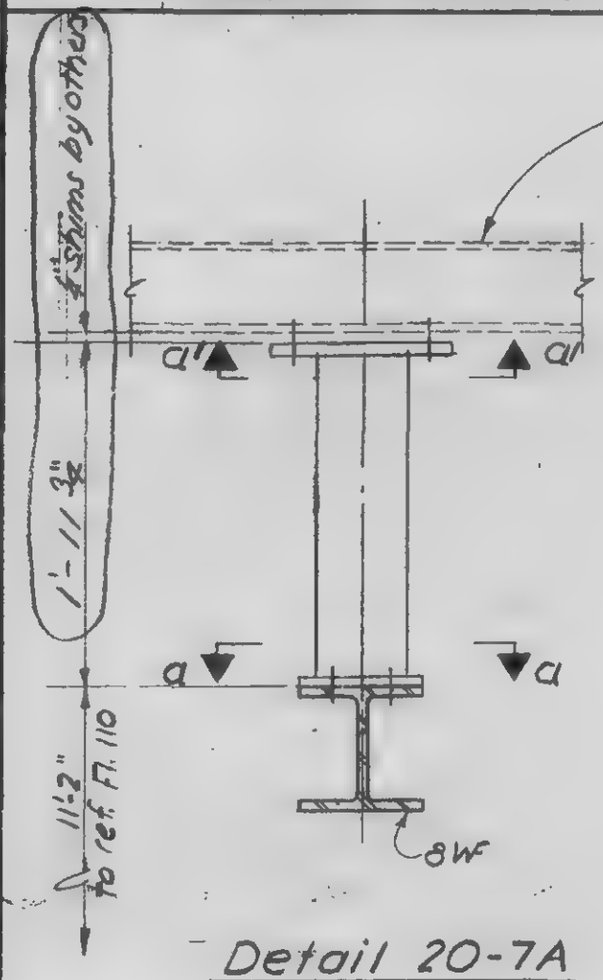

Detail 20-7A

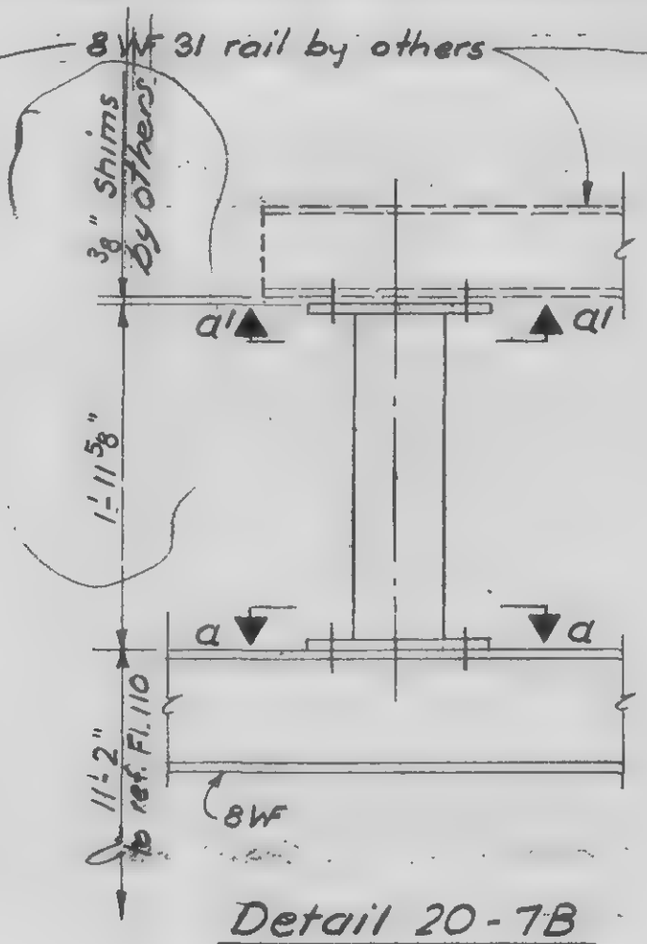

Detail 20-7B

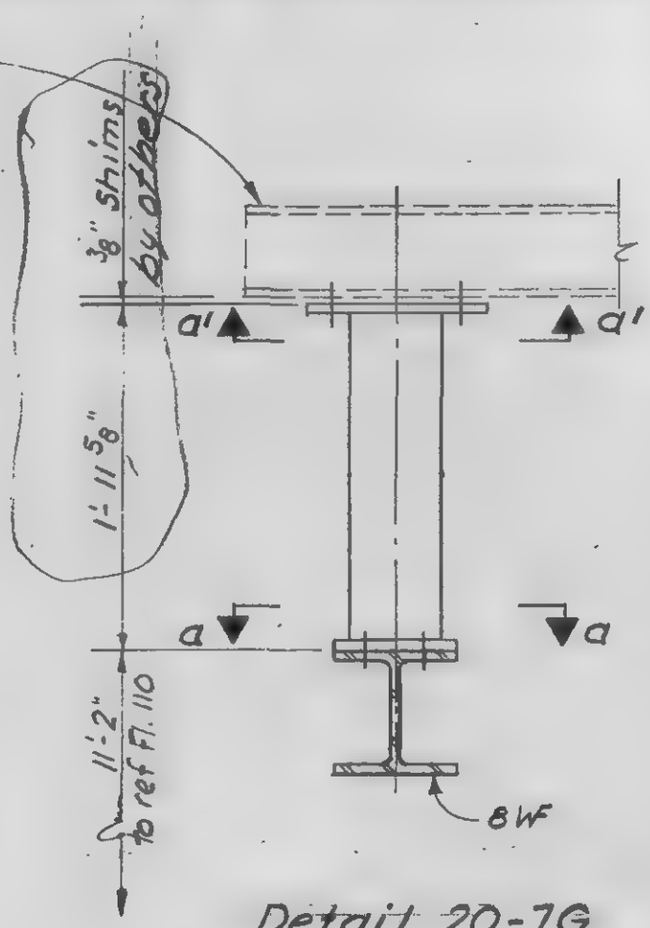

Detail 20-7C

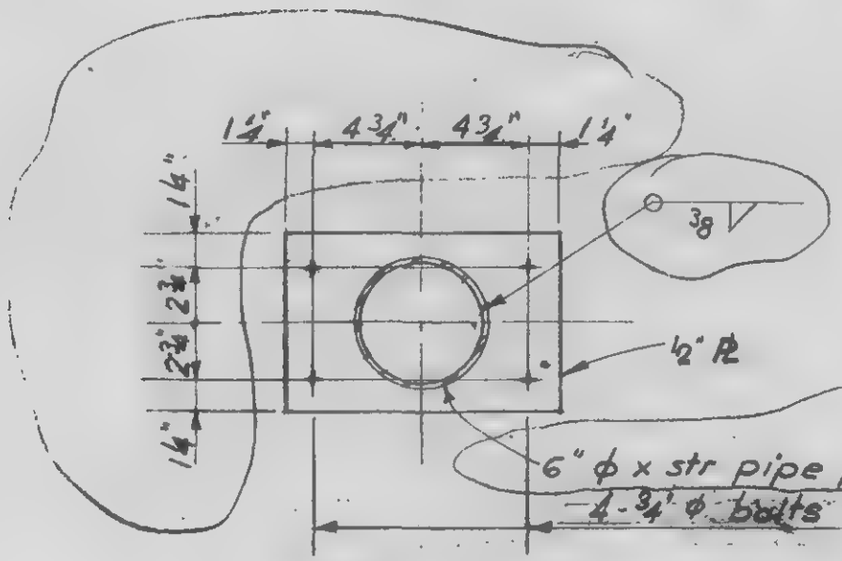

Section a-a

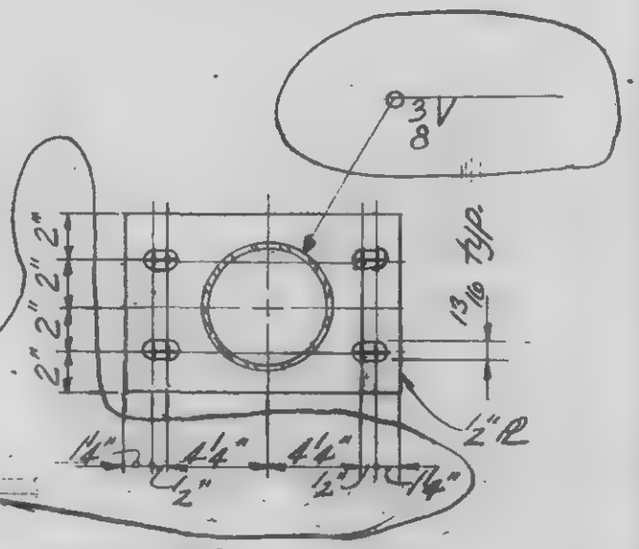

Section a'-a'

DESIGNED

DRAWN F. Smith

REVIEWED

9-AB 20-7.2

SKILLING, HELLE, CHRISTIANSEN, ROBERTSON — Structural & Civil Engineers

PROJECT: THE WORLD TRADE CENTER | TITLE: FL 107 - PH, CONNECTION DETAILS - PH ROOF | DATE: 8-20-70

REVISIONS

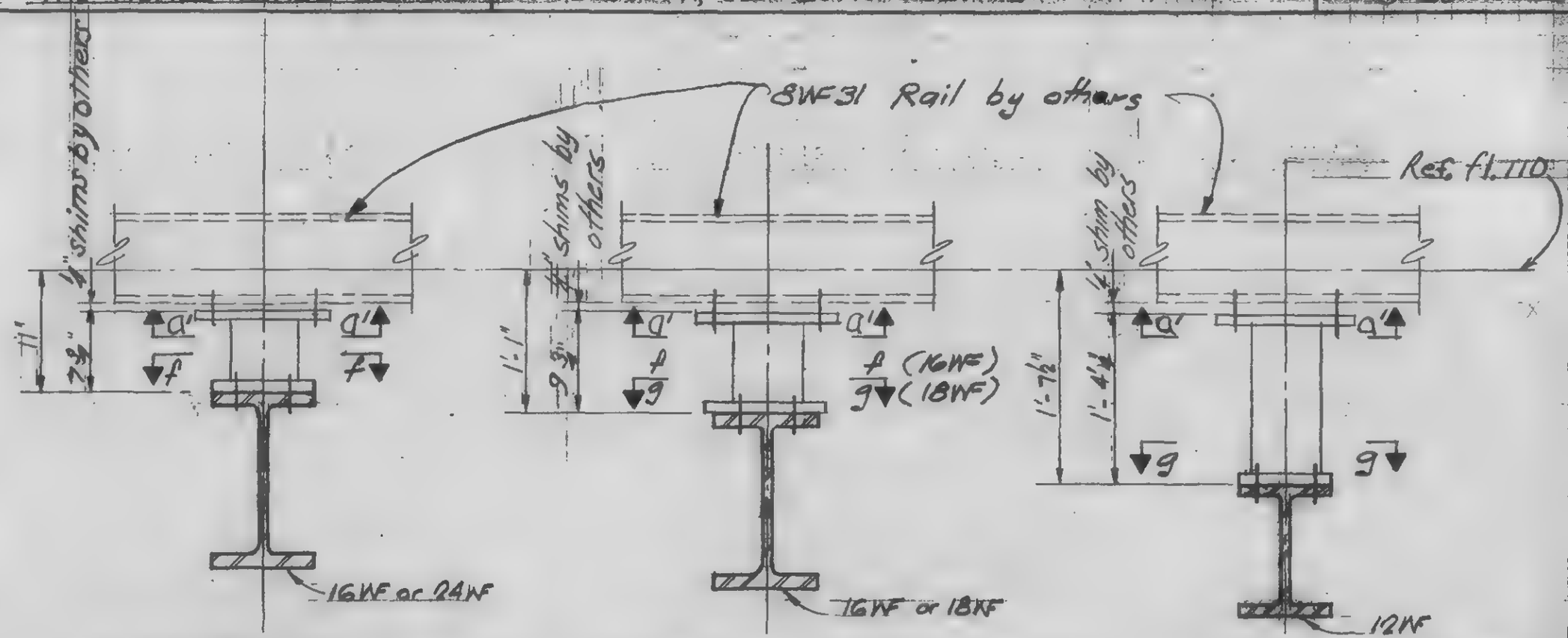

DETAIL 20-7C (beam -11")

DETAIL 20-7C (beam -1'-1")

DETAIL 20-7C (beam -1'-7 1/2")

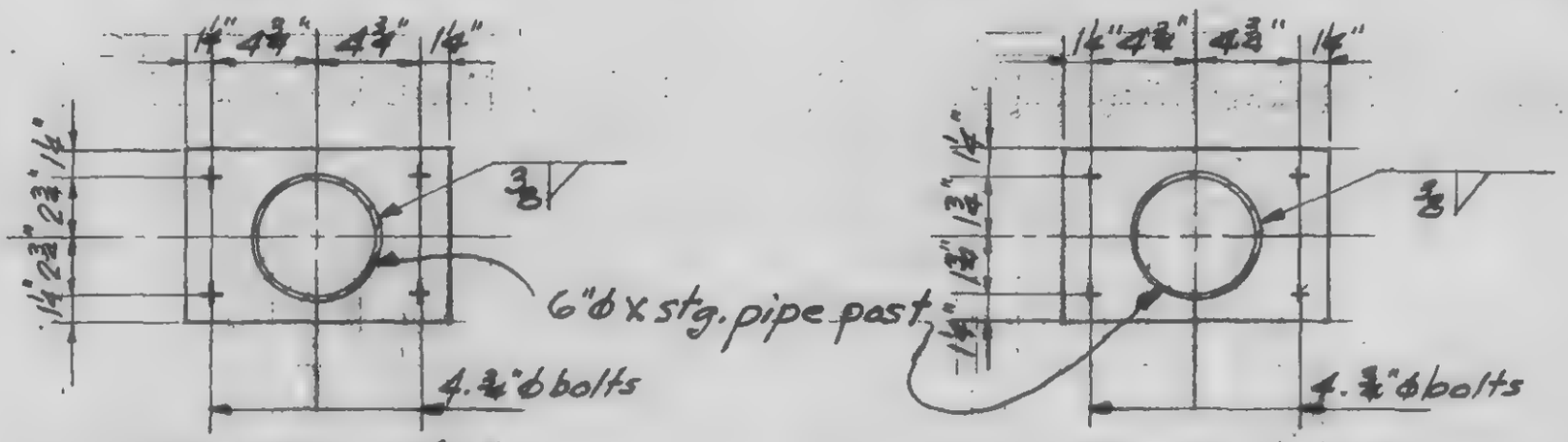

Section f-f

Section g-g

LICENSED PROFESSIONAL ENGINEER — LESLIE E. ROBERTSON — No. 25360 — UNIVERSITY OF THE STATE OF NEW YORK

DESIGNED

DRAWN: T. Tarelange

REVIEWED

9-AB20-7.S

SKILLING, HELLE, CHRISTIANSEN, ROBERTSON — Structural & Civil Engineers

PROJECT: THE WORLD TRADE CENTER | TITLE: Fl. 107-PH, CONNECTION DETAILS - PH ROOF | DATE: 8-20-70

REVISIONS

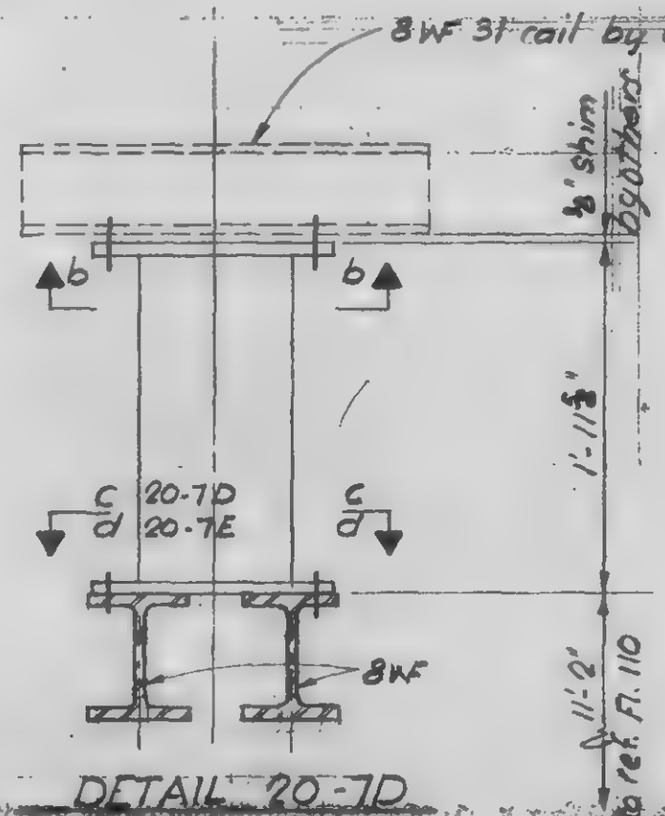

DETAIL 20-7D
DETAIL 20-7E

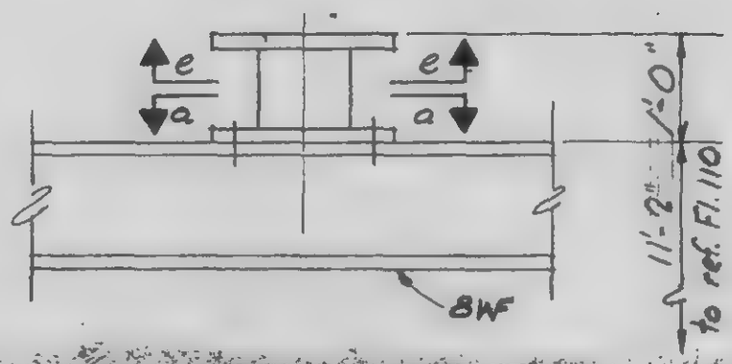

DETAIL 20-7F

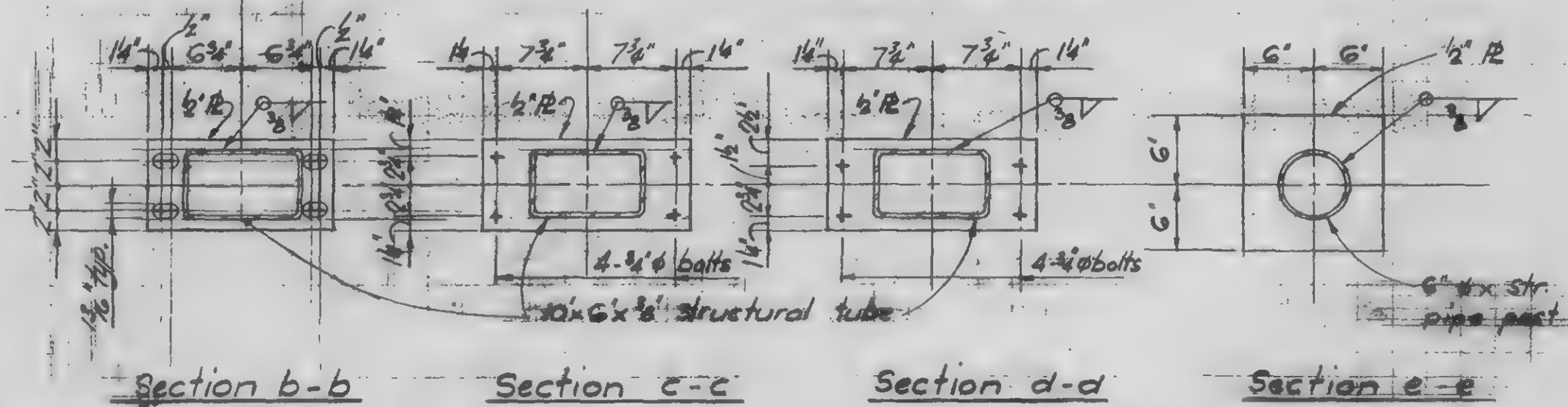

Section b-b | Section c-c | Section d-d | Section e-e

LICENSED PROFESSIONAL ENGINEER — LESLIE E. ROBERTSON — No. 34960 — UNIVERSITY OF THE STATE OF NEW YORK

DESIGNED

DRAWN: T. Terrebonne

REVIEWED

9-A820-7.4

SKILLING, HELLE, CHRISTIANSEN, ROBERTSON — Structural & Civil Engineers

PROJECT: THE WORLD TRADE CENTER | TITLE: FLOOR PLAN PH PART PLAN - PH ROOF | DATE: 12/24/70

REVISIONS

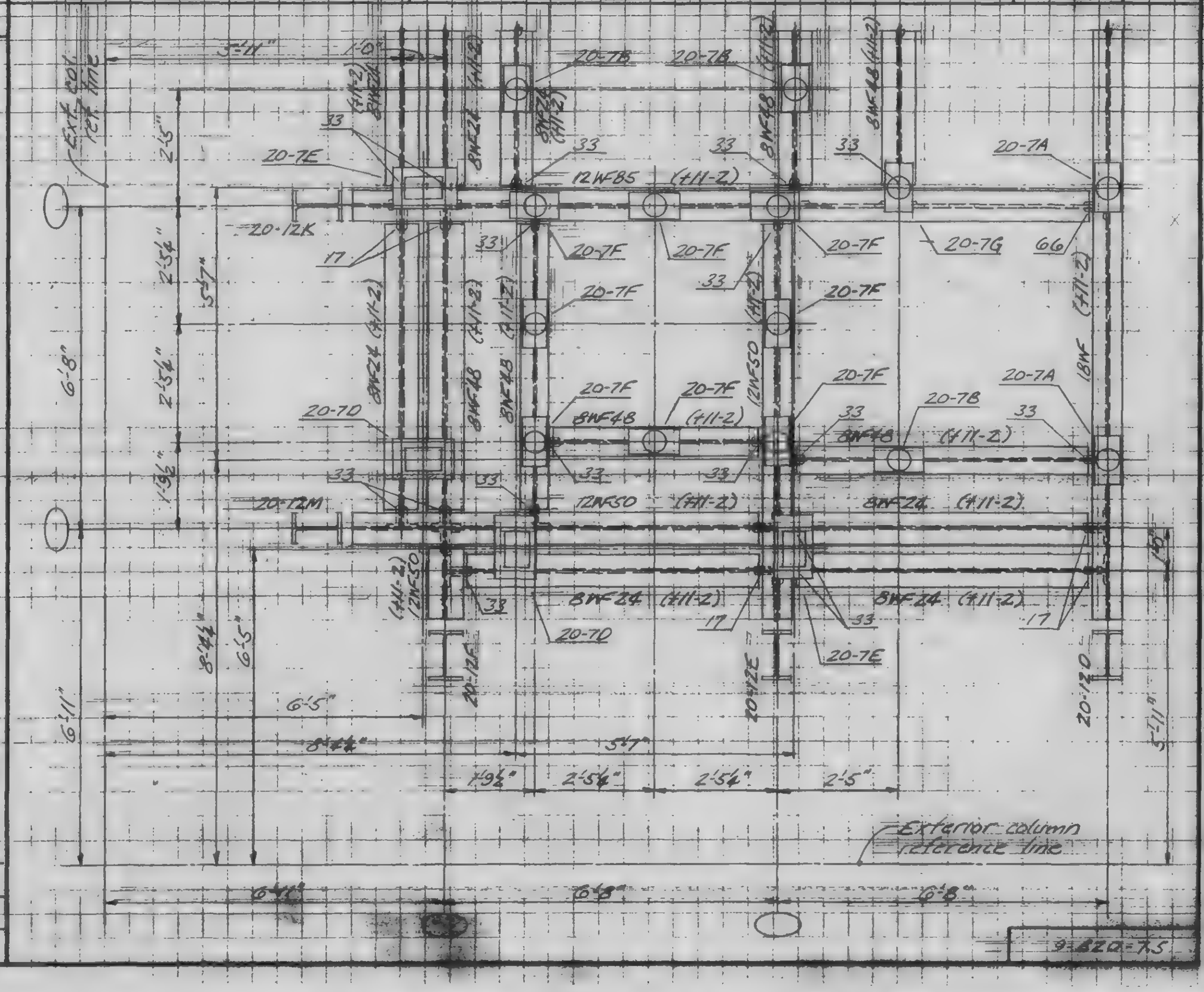

LICENSED PROFESSIONAL ENGINEER
LESLIE E. ROBERTSON
No. 34260
UNIVERSITY OF THE STATE OF NEW YORK

DESIGNED

DRAWN

REVIEWED

SKILLING, HELLE, CHRISTIANSEN, ROBERTSON — Structural & Civil Engineers

PROJECT: THE WORLD TRADE CENTER | TITLE: FLOOR 107-PH CONNECTION DETAILS-PH ROOF | DATE: 4-1-70

REVISIONS
6/18/70

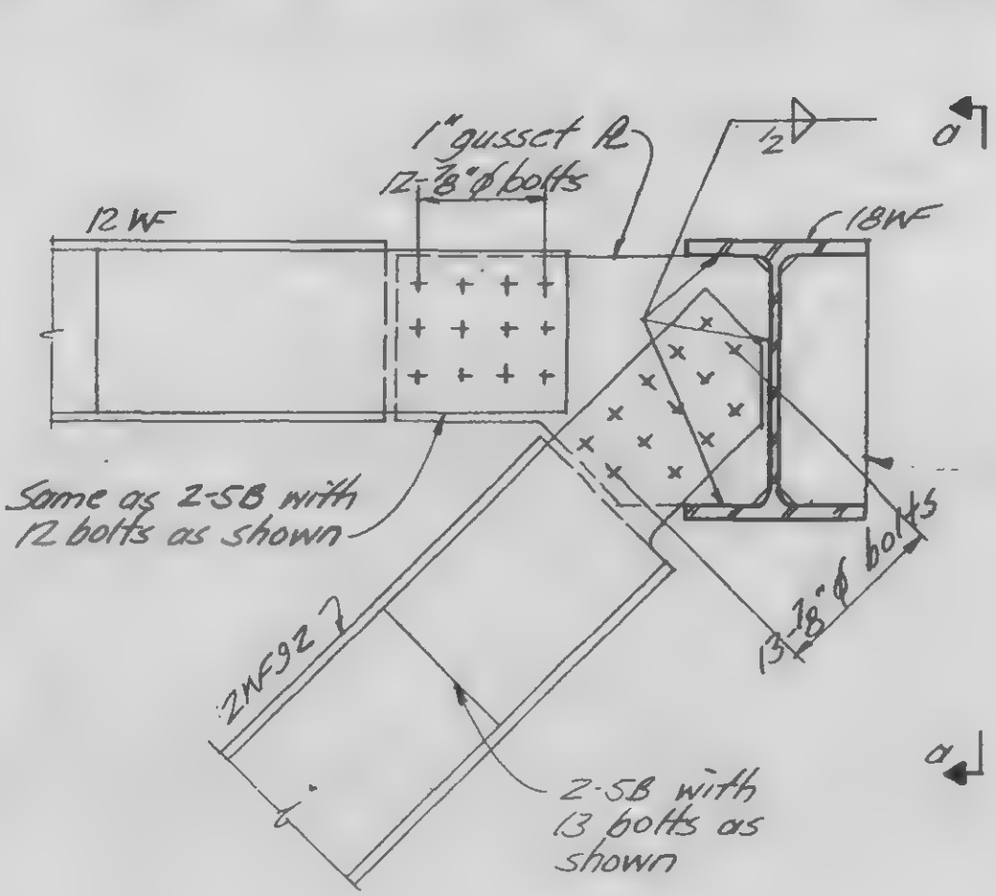

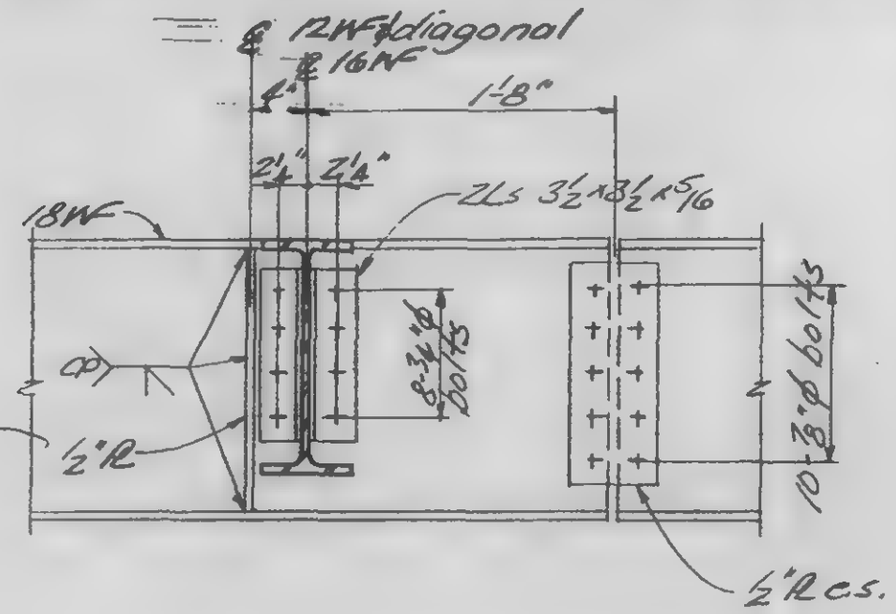

Section a-a

Detail: 20-8A

LICENSED PROFESSIONAL ENGINEER
LESLIE E. ROBERTSON
No 34360
UNIVERSITY OF THE STATE OF NEW YORK

DESIGNED
DRAWN JA
REVIEWED

9-A820-8.1

SKILLING, HELLE, CHRISTIANSEN, ROBERTSON — Structural & Civil Engineers

PROJECT: THE WORLD TRADE CENTER | TITLE: FLOOR TOT-PH CONNECTION DETAIL - PH ROOF | DATE: 4-1-70

REVISIONS
6/18/70

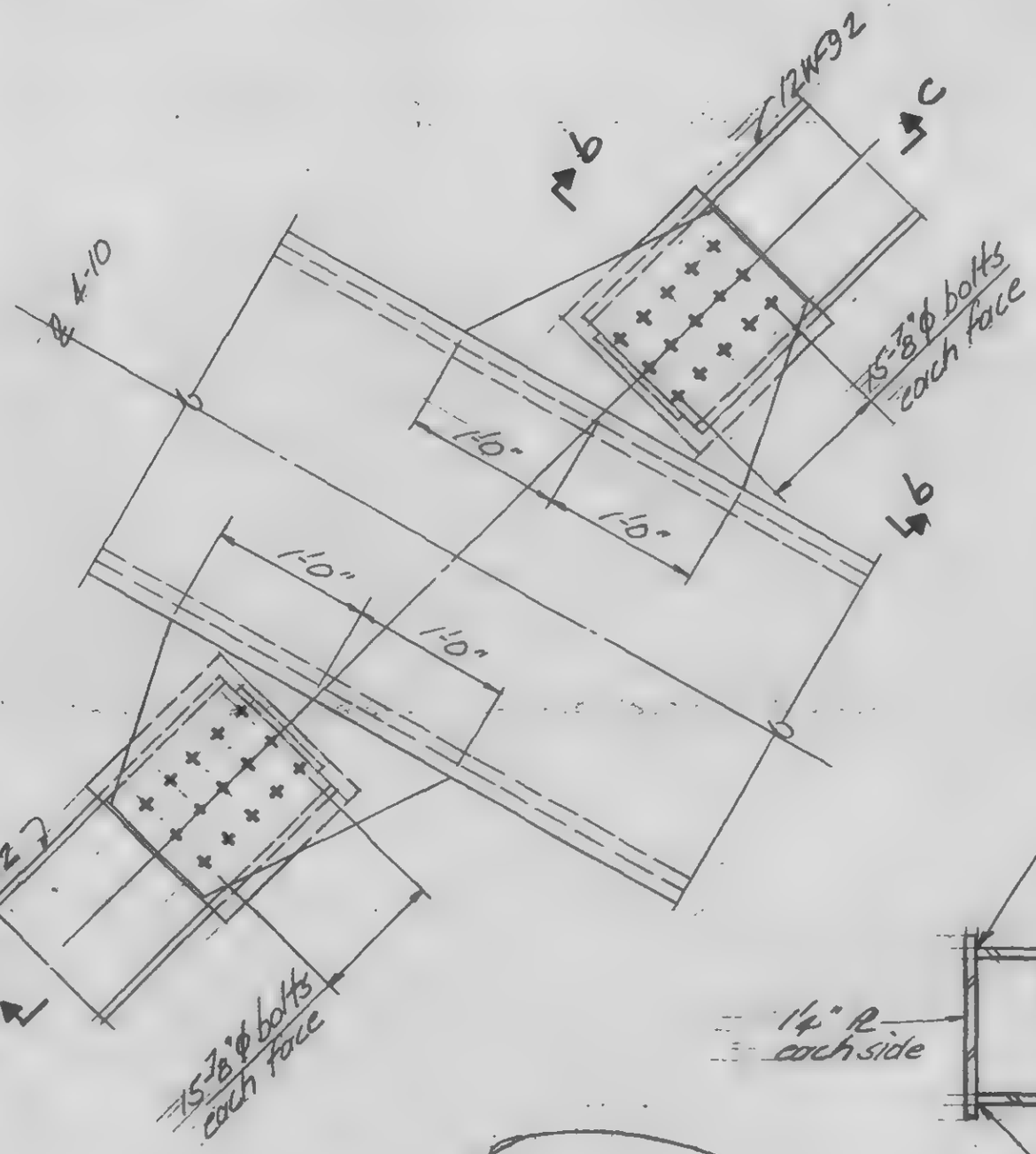

Detail 20-BB

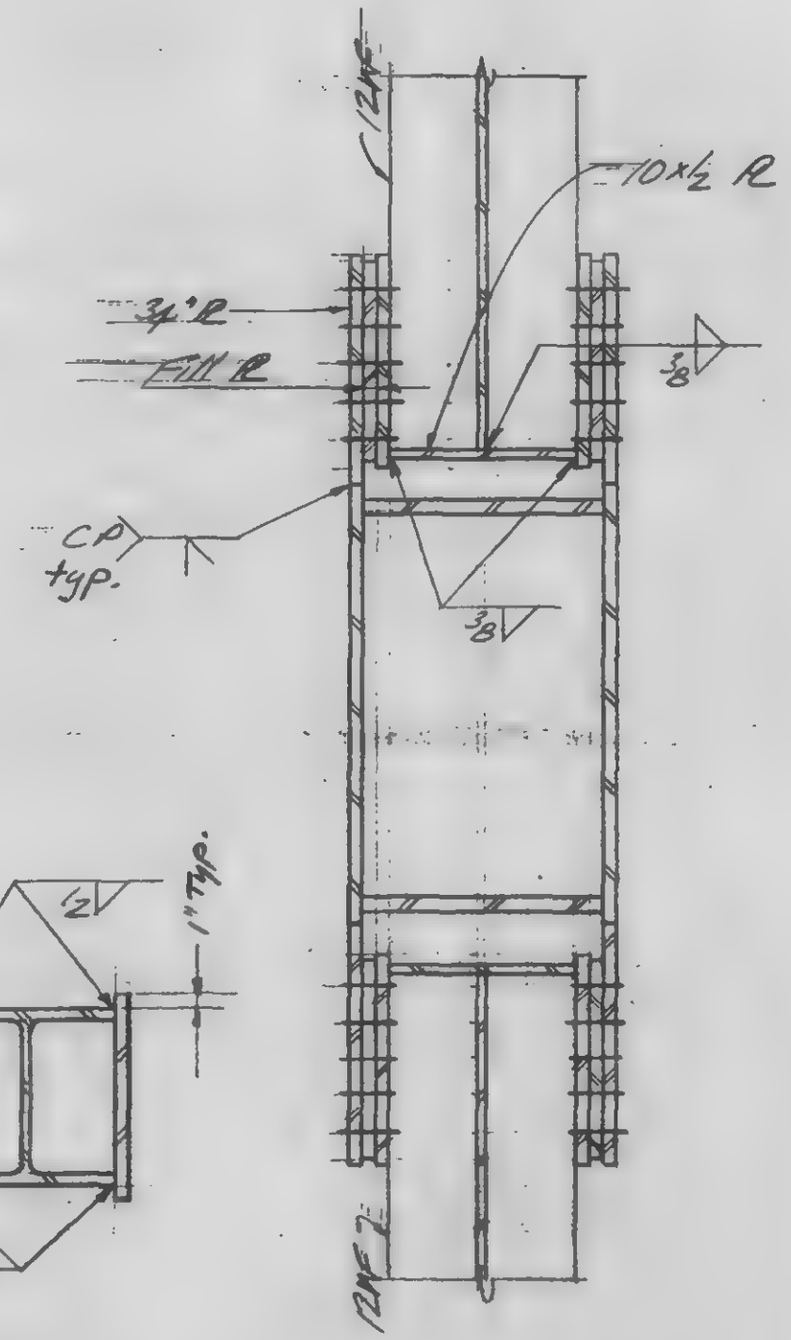

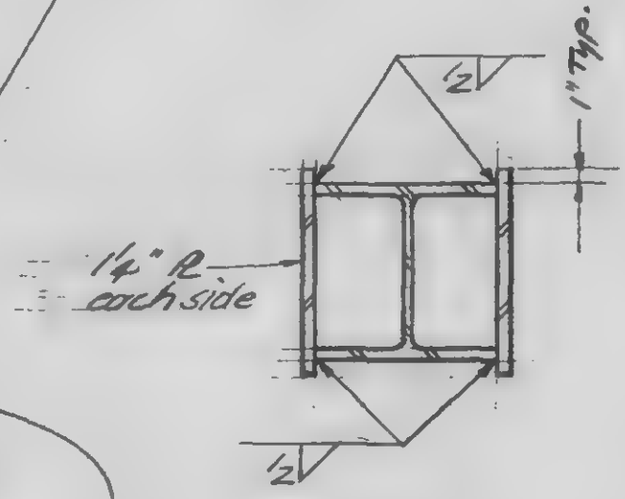

Section b-b

Section c-c

LICENSED PROFESSIONAL ENGINEER — LESLIE E. ROBERTSON — No. 34960 — UNIVERSITY OF THE STATE OF NEW YORK

DESIGNED

DRAWN J. Adams

REVIEWED

9-A820-22

SKILLING, HELLE, CHRISTIANSEN, ROBERTSON — Structural & Civil Engineers

PROJECT THE WORLD TRADE CENTER | TITLE EL. 107-PH CONNECTION DETAILS-PH ROOF | DATE 7-8-70

REVISIONS

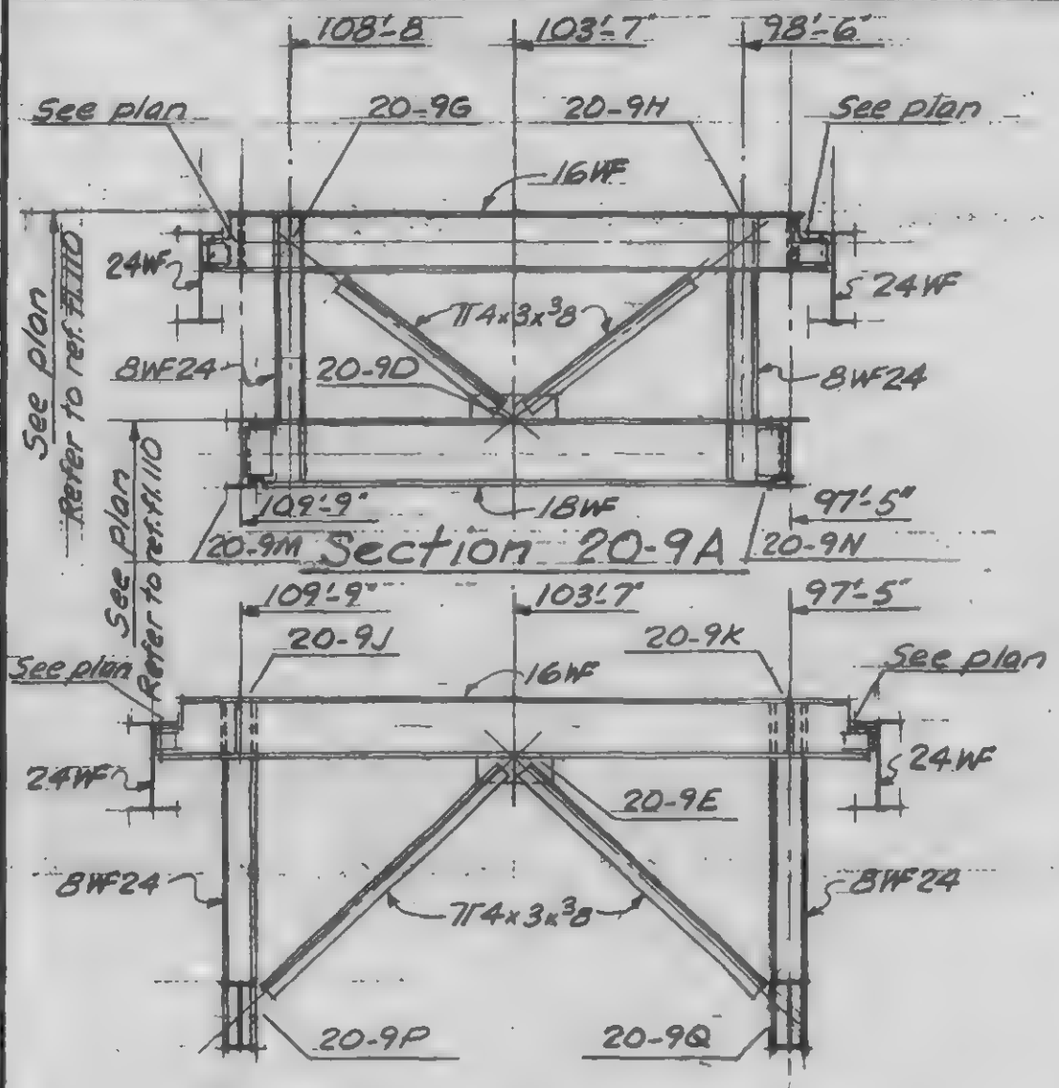

Section 20-9A

Section 20-9B

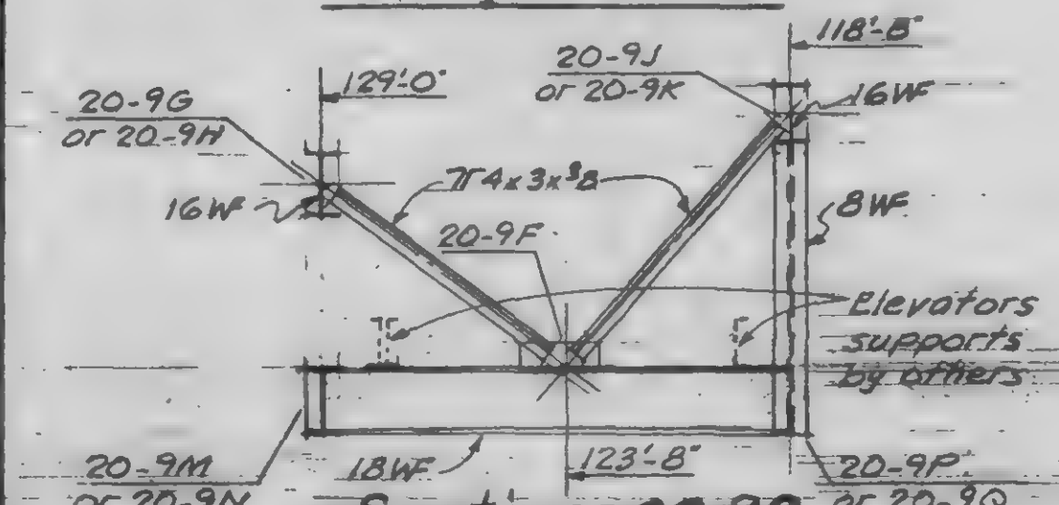

Section 20-9C

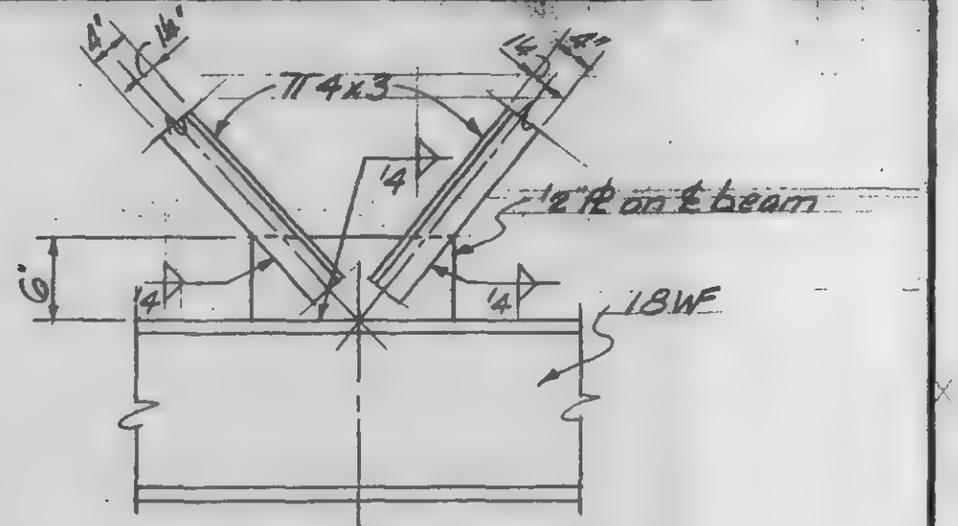

Detail 20-9D

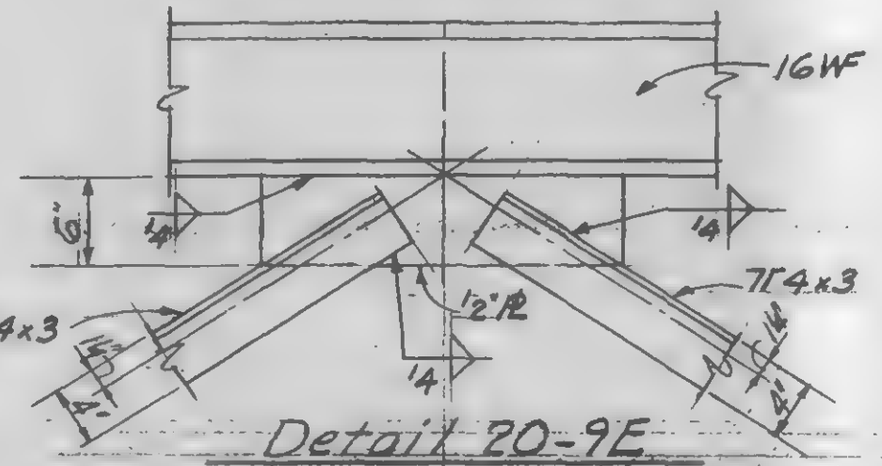

Detail 20-9E

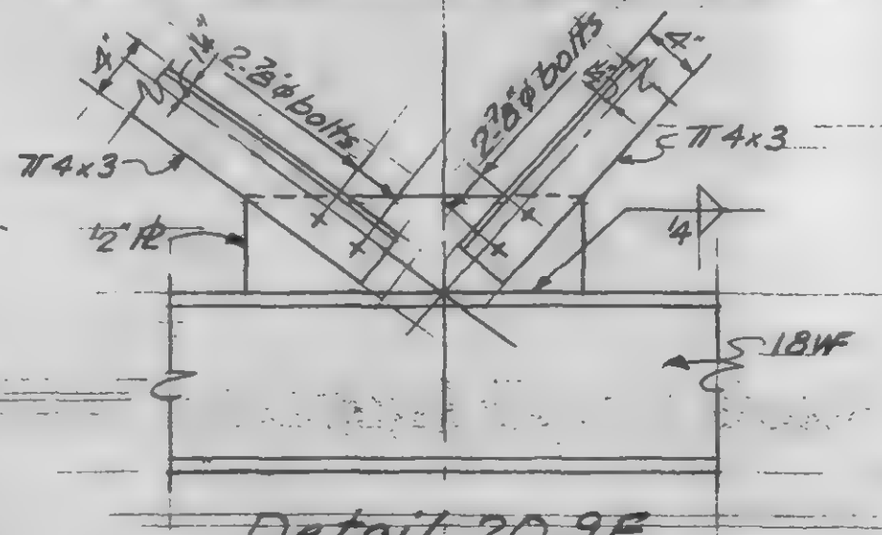

Detail 20-9F

LICENSED PROFESSIONAL ENGINEER — LESLIE E. ROBERTSON — No. 34260 — UNIVERSITY OF THE STATE OF NEW YORK

DESIGNED

DRAWN A.FRANQUI

REVIEWED

9-AB 20-9.1

SKILLING, HELLE, CHRISTIANSEN, ROBERTSON — Structural & Civil Engineers

PROJECT: THE WORLD TRADE CENTER | TITLE: FL.107-PH, CONNECTION DETAILS-PH. ROOF | DATE: 7-8-70

REVISIONS

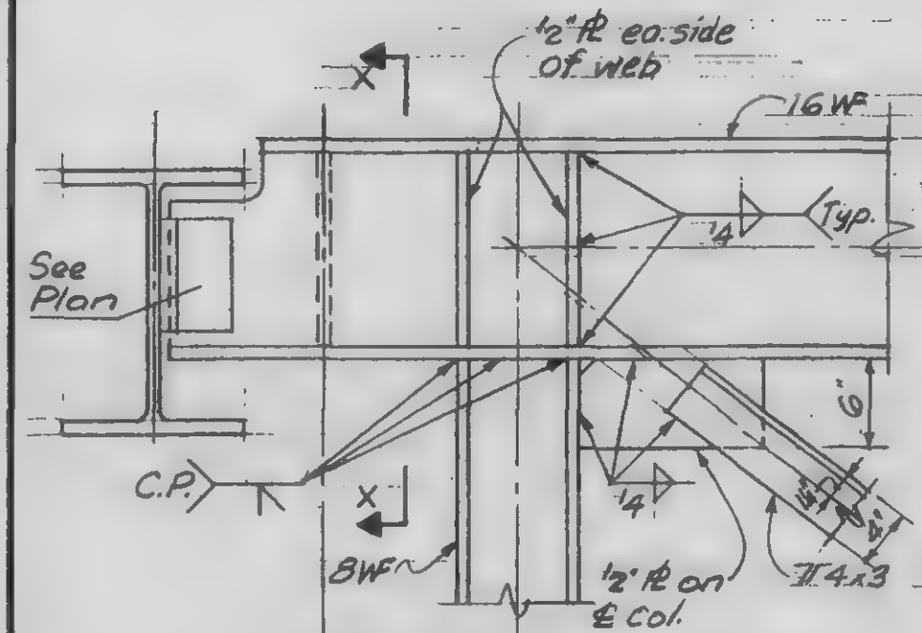

Detail 20-9G
Detail 20-9H opp. hand

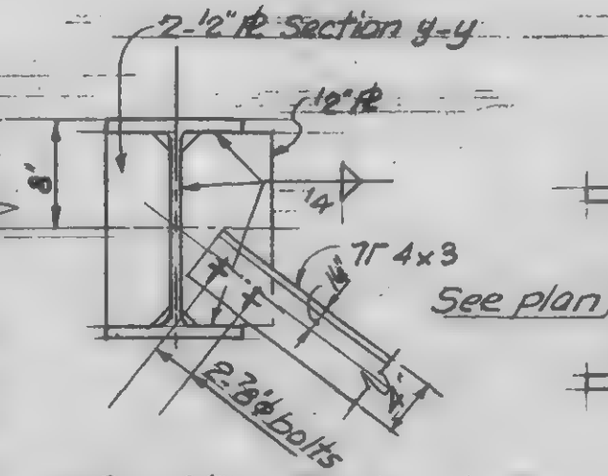

Section X-X
Section y-y as noted

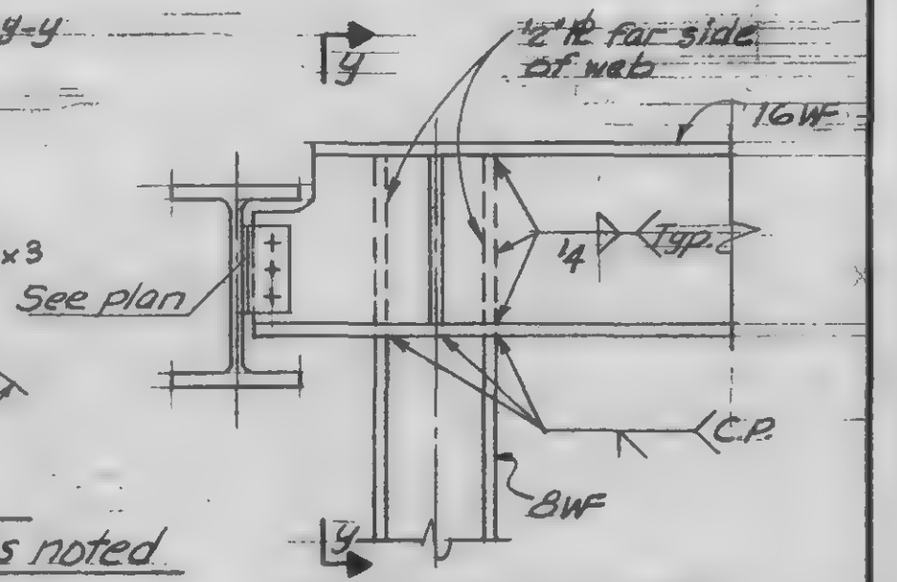

Detail 20-9J
Detail 20-9K opp. hand

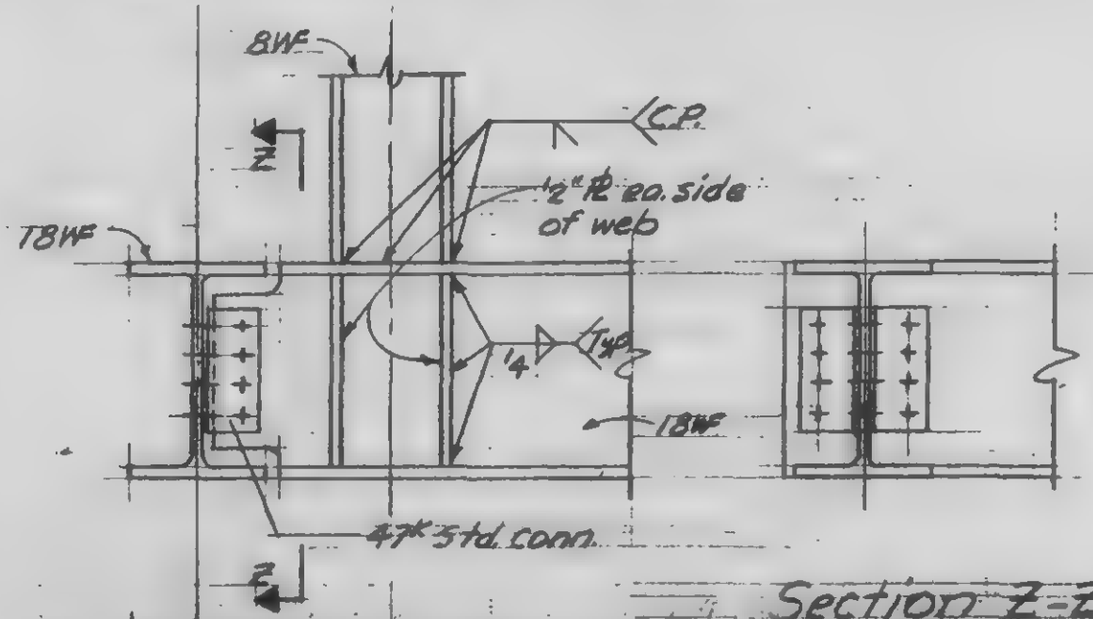

Section Z-Z

Detail 20-9M
Detail 20-9N opp. hand

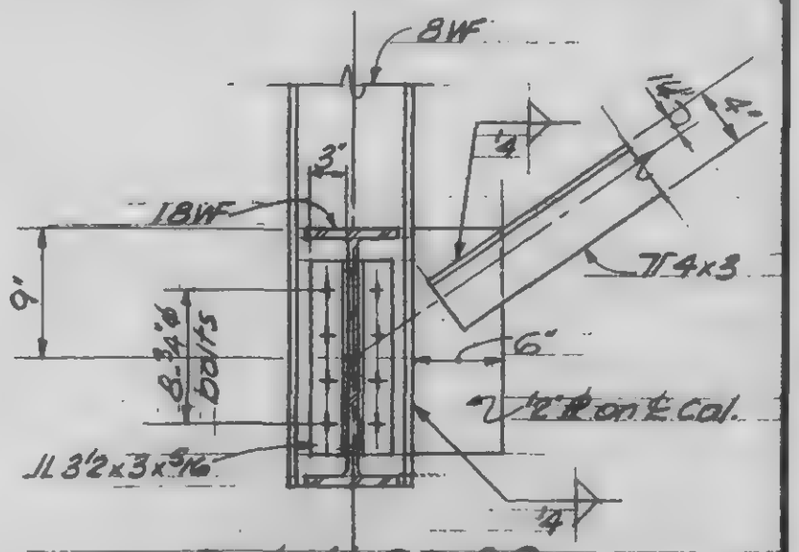

Detail 20-9P
Detail 20-9Q opp. hand

LICENSED PROFESSIONAL ENGINEER — LESLIE E. ROBERTSON — No. 54360 — UNIVERSITY OF THE STATE OF NEW YORK

DESIGNED

DRAWN: A. FRANQUI

REVIEWED

9-AB20-9.2

SKILLING, HELLE, CHRISTIANSEN, ROBERTSON — Structural & Civil Engineers

PROJECT [illegible] — TITLE FIL 107-PH, CONNECTION DETAILS - PH ROOF — DATE 12/20/71

REVISIONS
9/27/71

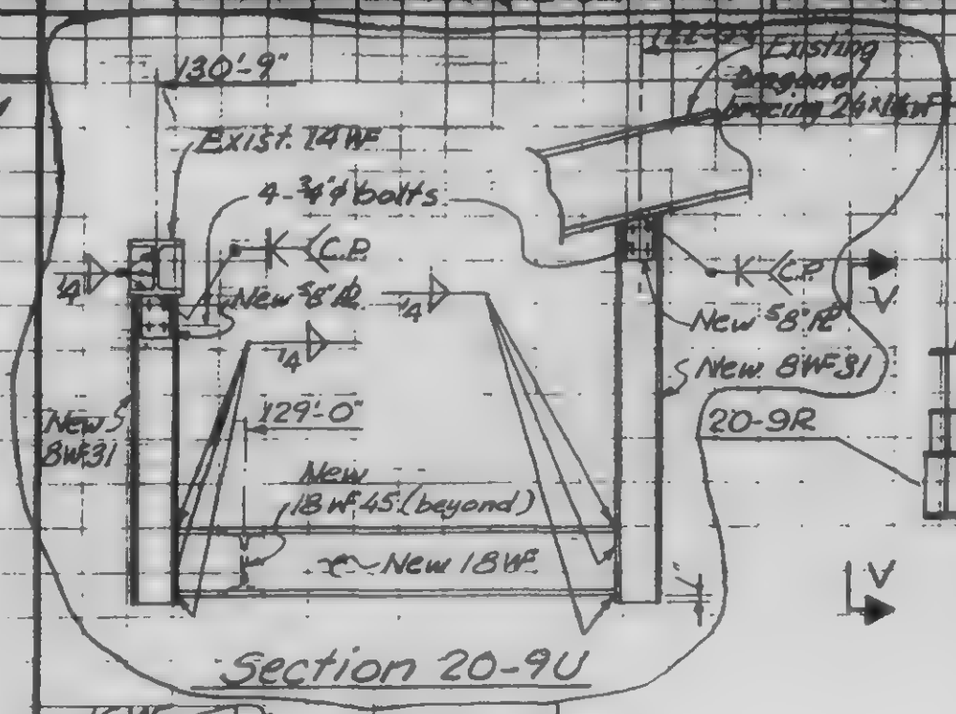

Section 20-9U

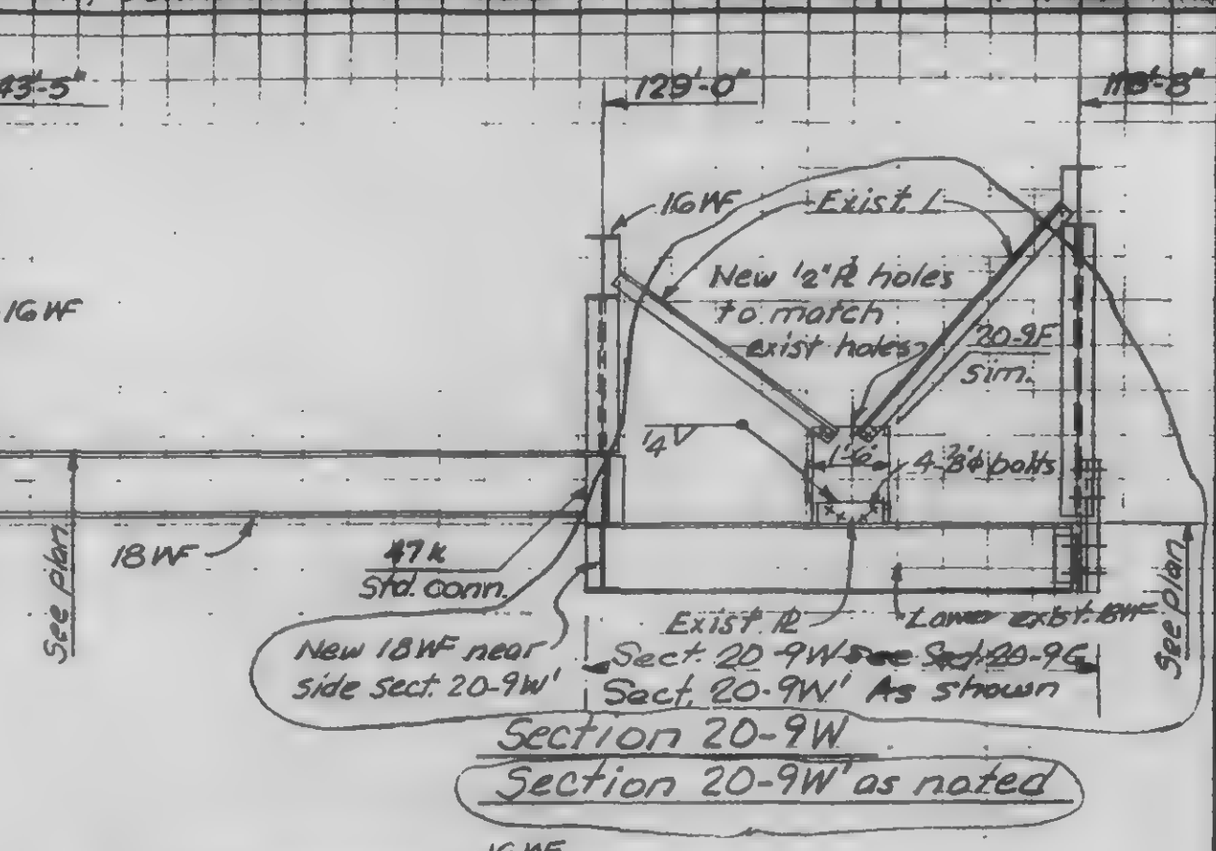

Section 20-9W

Section 20-9W' as noted

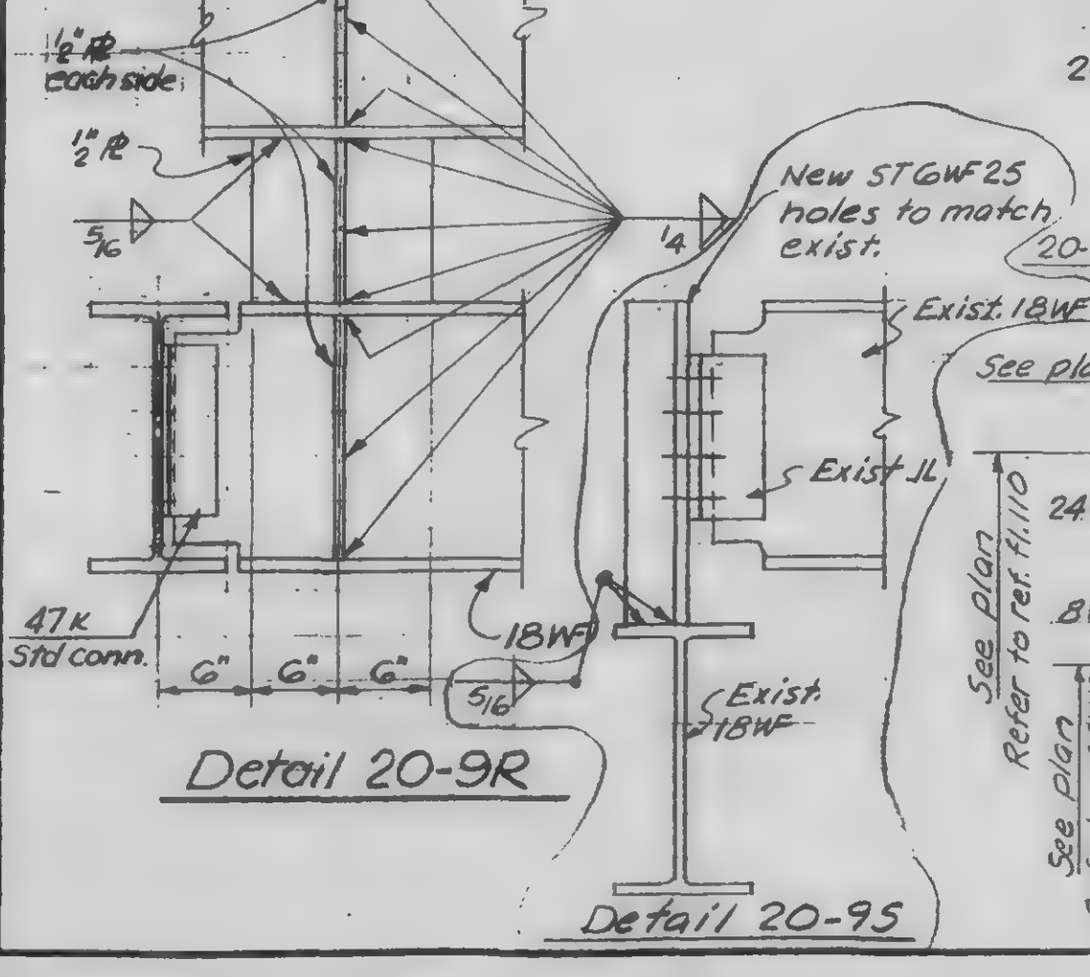

Detail 20-9R

Detail 20-9S

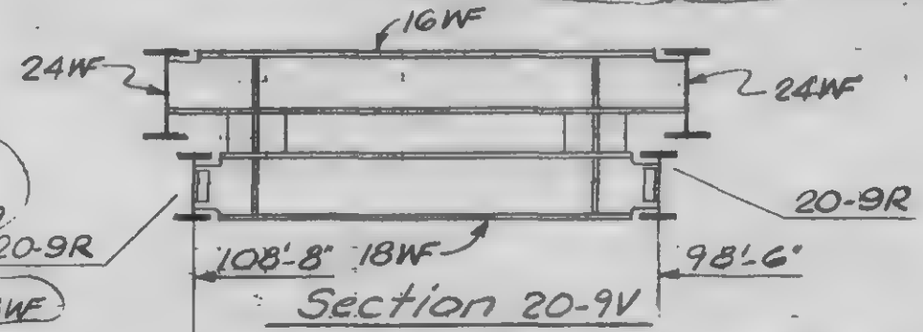

Section 20-9V

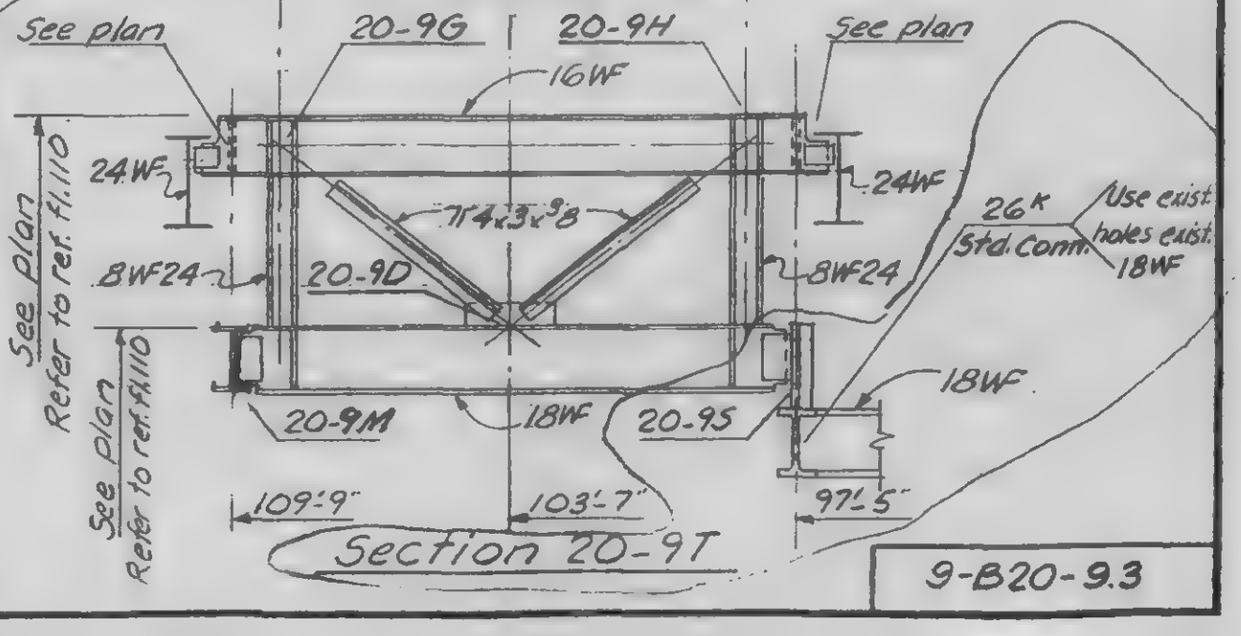

Section 20-9T

LICENSED PROFESSIONAL ENGINEER — LESLIE E. ROBERTSON — No. 34960 — UNIVERSITY OF THE STATE OF NEW YORK

DESIGNED

DRAWN S.C.

REVIEWED

9-B20-9.3

SKILLING, HELLE, CHRISTIANSEN, ROBERTSON — Structural & Civil Engineers

PROJECT: THE WORLD TRADE CENTER | TITLE: FL 107 - PH CONNECTION DETAILS - PH ROOF | DATE: 4-1-70

REVISIONS

8/20/70

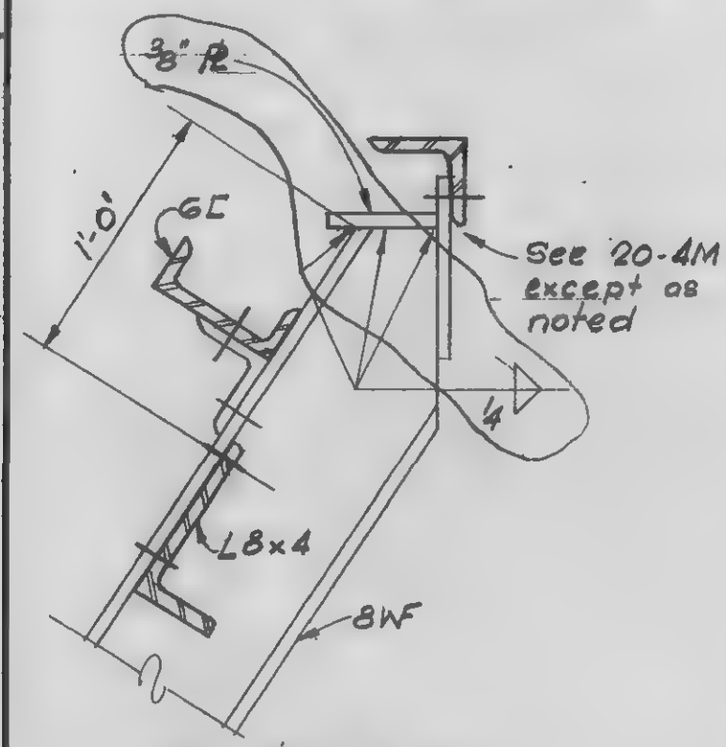

Section b-b

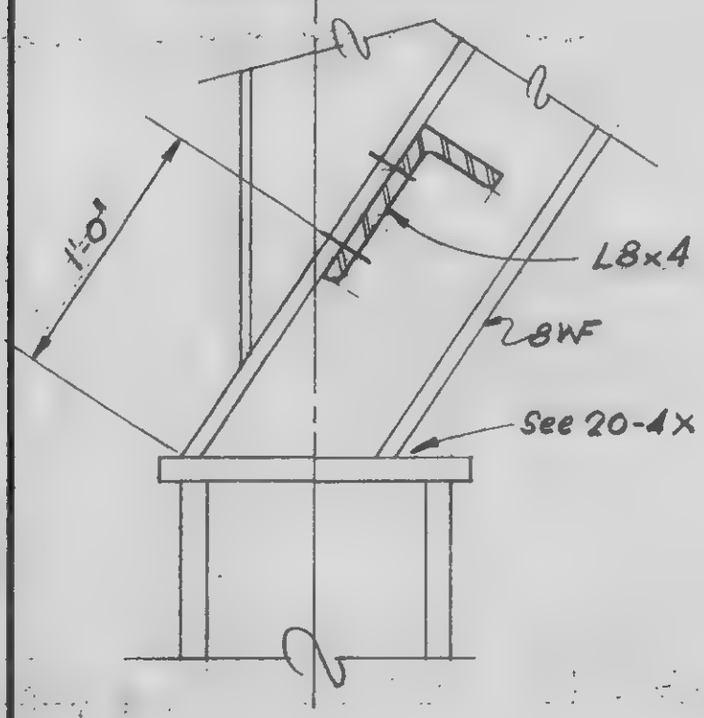

Section c-c

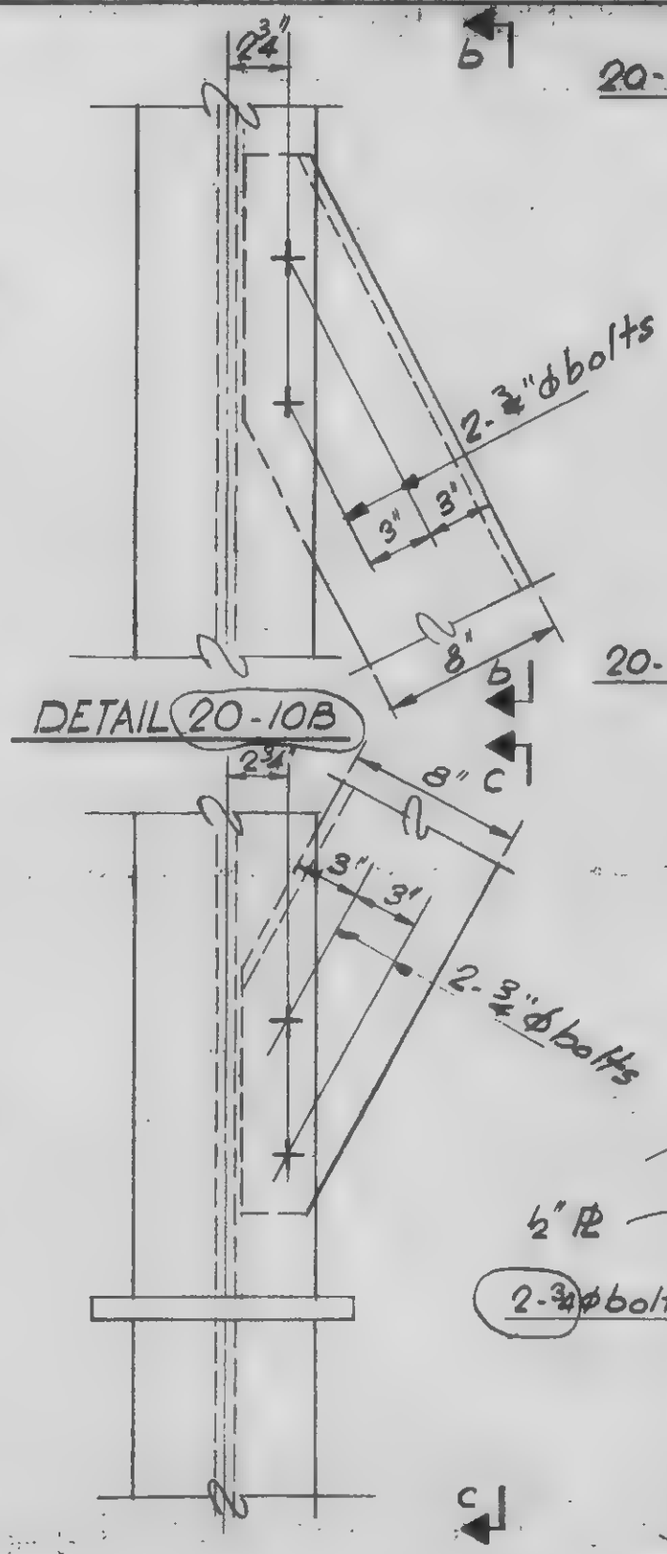

DETAIL 20-10B

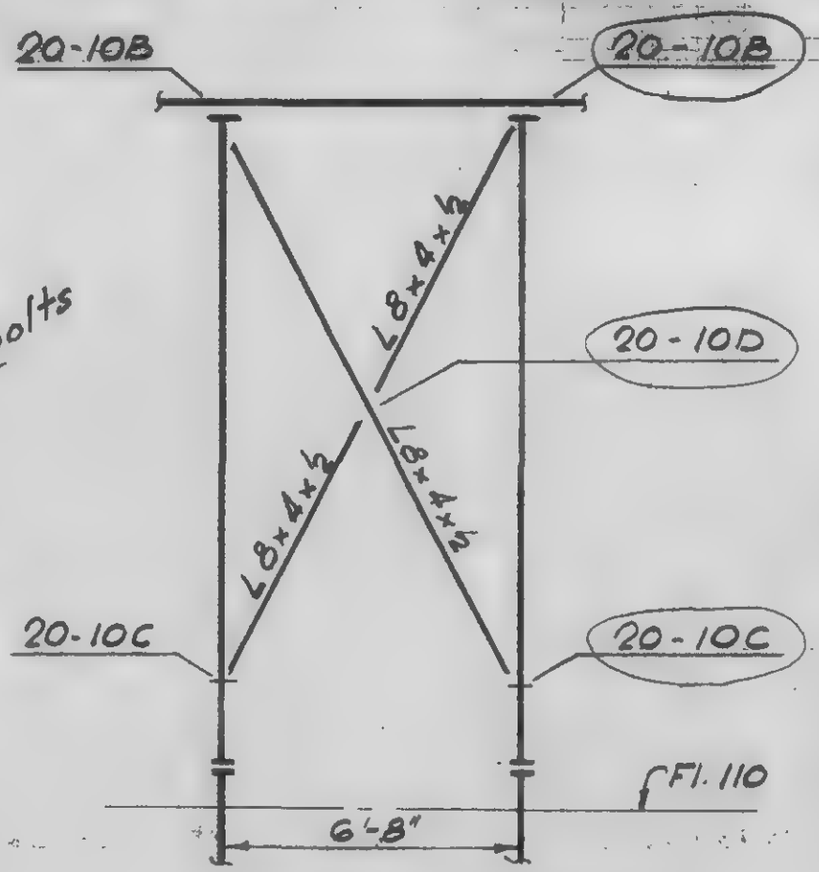

DETAIL 20-10C

DETAIL 20-10A
See SA 1201 SB for location

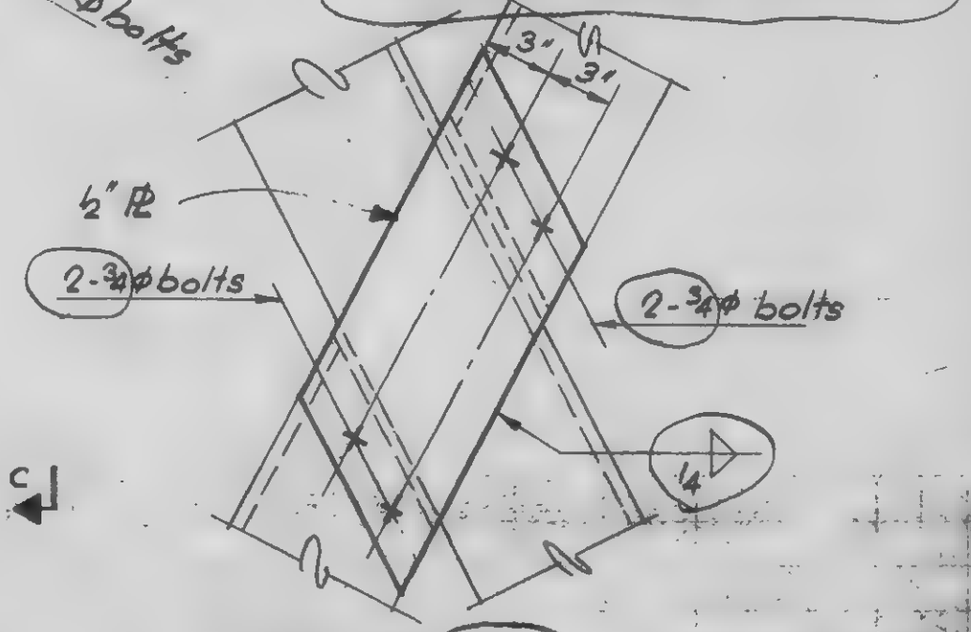

DETAIL 20-10D

LICENSED PROFESSIONAL ENGINEER — LESLIE E. ROBERTSON — No. 34360 — UNIVERSITY OF THE STATE OF NEW YORK

DESIGNED

DRAWN: T. Terrelonge

REVIEWED

9-AB 20-10

SKILLING, HELLE, CHRISTIANSEN, ROBERTSON — Structural & Civil Engineers

PROJECT THE WORLD TRADE CENTER — TITLE FL 107 - PH CONNECTION DETAILS - PH ROOF — DATE 12/31/72

REVISIONS
10/4/74

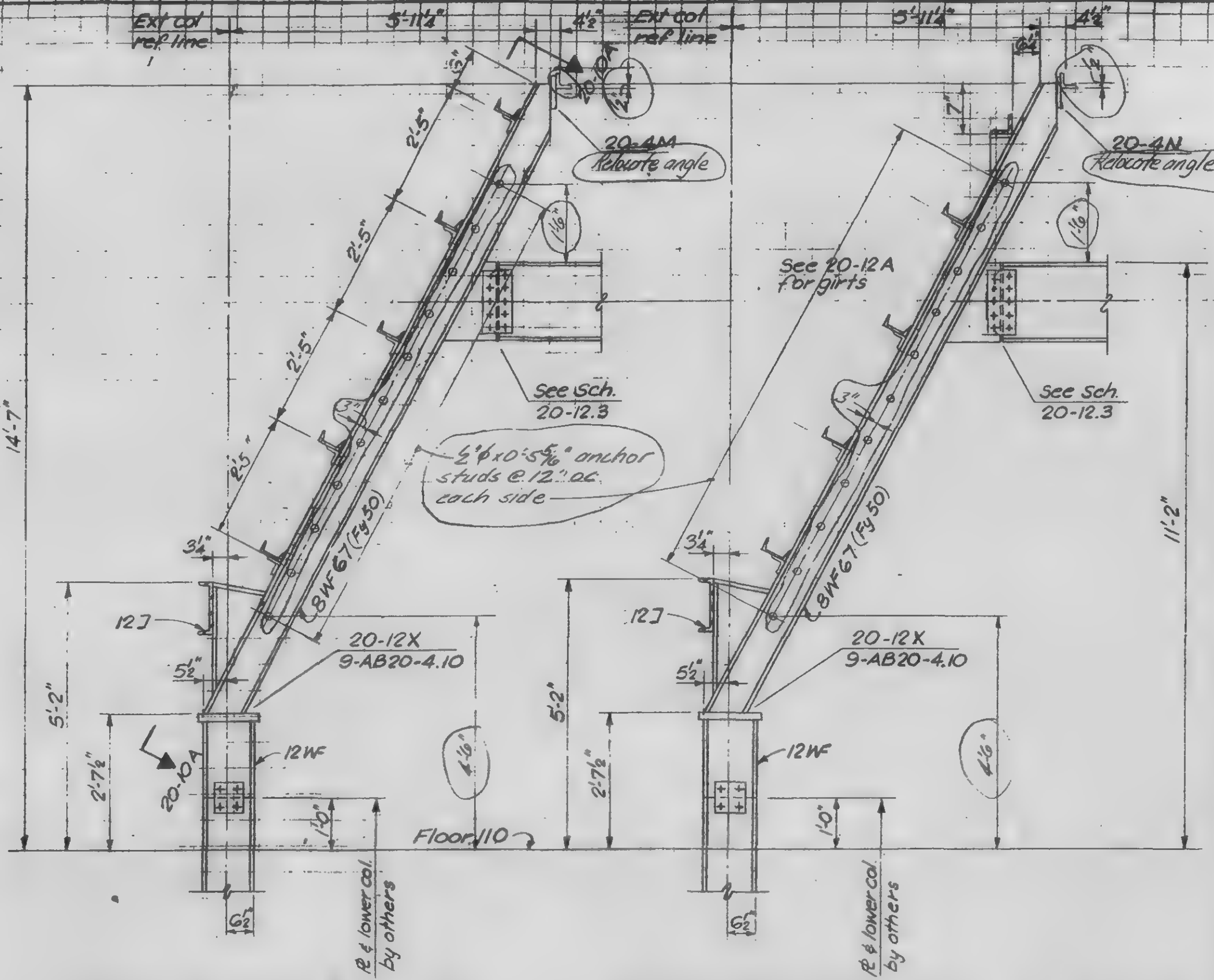

DETAIL 20-12A, 12B, 12C & 12G

DETAIL 20-12D, 12H & 12P

LICENSED PROFESSIONAL ENGINEER — LESLIE E. ROBERTSON — No 34960 — UNIVERSITY OF THE STATE OF NEW YORK

DESIGNED

DRAWN S.C.

REVIEWED

9-B20-12.1

SKILLING, HELLE, CHRISTIANSEN ROBERTSON — Structural & Civil Engineers

PROJECT THE WORLD TRADE CENTER | TITLE FL 107 PH, CONNECTION DETAILS — PH ROOF | DATE 12/21/70

REVISIONS
10/4/71

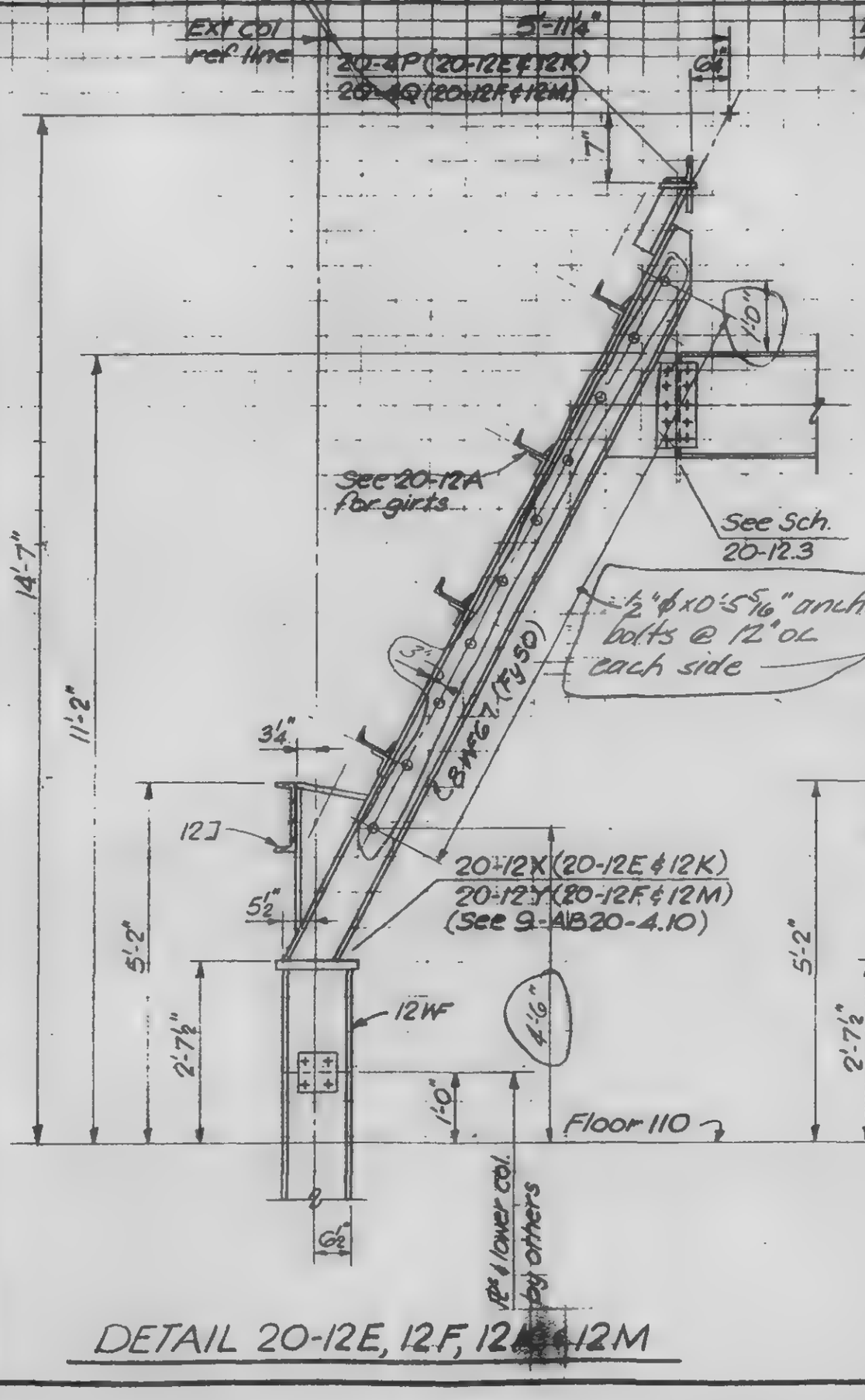

DETAIL 20-12E, 12F, 12[illegible] & 12M

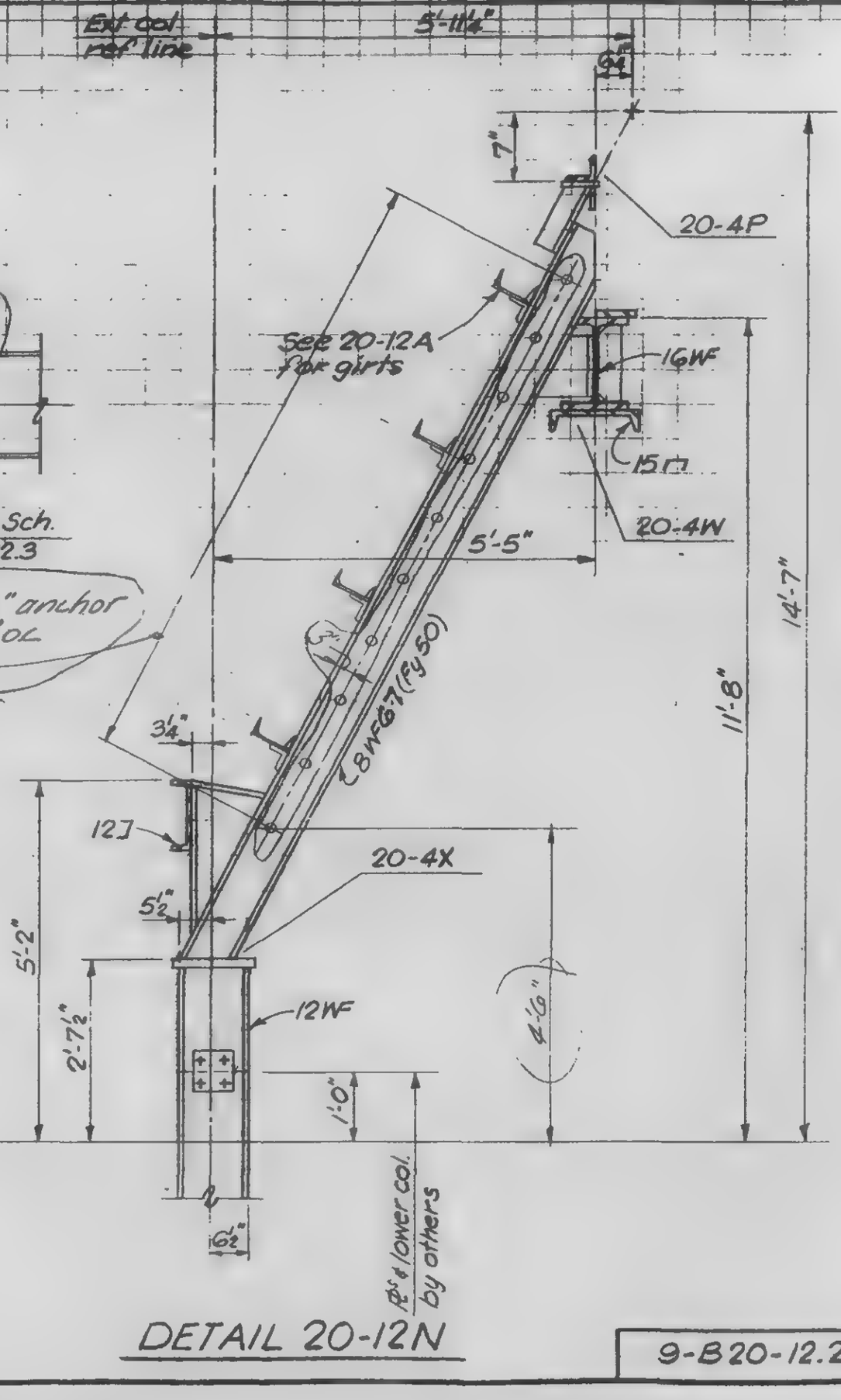

DETAIL 20-12N

9-B20-12.2

LICENSED PROFESSIONAL ENGINEER — LESLIE E. ROBERTSON — No 34960 — UNIVERSITY OF THE STATE OF NEW YORK

DESIGNED

DRAWN S.C.

REVIEWED

SKILLING, HELLE, CHRISTIANSEN, ROBERTSON — Structural & Civil Engineers

PROJECT THE WORLD TRADE CENTER — TITLE EL.107-PH CONNECTION DETAILS — PH ROOF — DATE 12/21/70

REVISIONS

DET. NO.	℘ A	℘ B	BOLT P (A490)
20-12A	3/8"	5/8"	5-1"φ
20-12B	5/16"	1/2"	5-7/8"φ
20-12C	5/16"	1/2"	5-7/8"φ
20-12D	3/8"	5/8"	5-1"φ
20-12E	7/16"	3/8"	3-1"φ
20-12F	1/4"	3/8"	3-7/8"φ
20-12G	5/16"	3/8"	3-7/8"φ
20-12H	5/16"	7/16"	3-1"φ
20-12K	7/16"	1/2"	3-1"φ
20-12M	1/4"	3/8"	3-7/8"φ
20-12P	3/8"	5/8"	5-1"φ

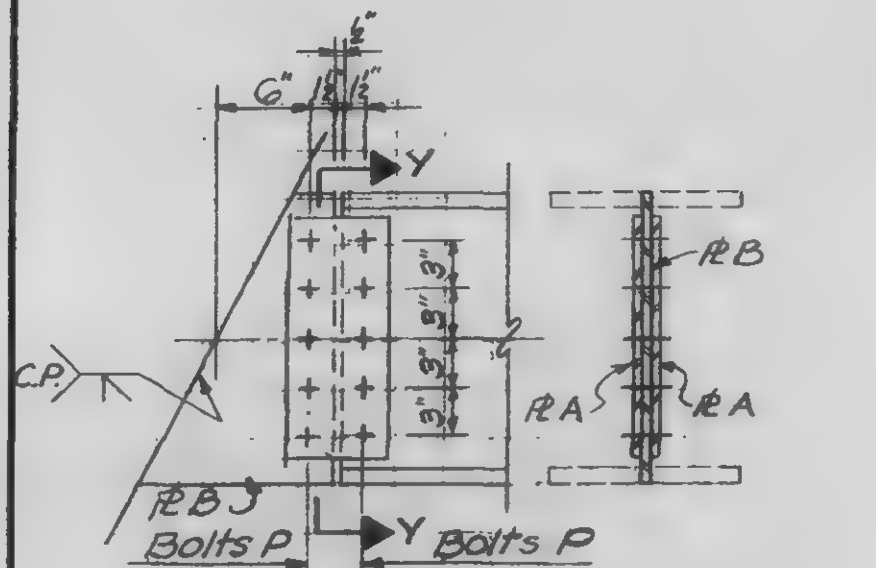

Elevation   Sect. Y-Y

(For Det. No^s 20-12A thru 12D & 12P)

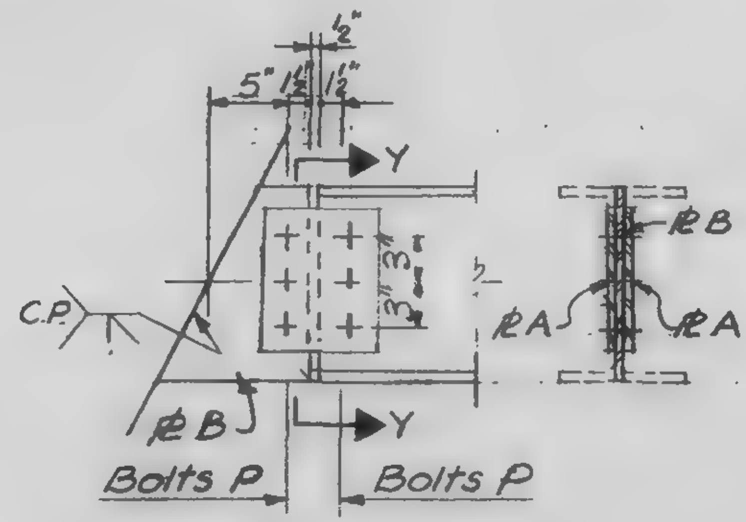

Elevation   Sect. Y-Y

(For Det. No^s 20-12E, 20-12F, 20-12G, 20-12H, 20-12K & 20-12M)

LICENSED PROFESSIONAL ENGINEER — LESLIE E. ROBERTSON — No 34360 — UNIVERSITY OF THE STATE OF NEW YORK

SIGNED

DRAWN S.C.

9-B20-12.3

SKILLING, HELLE, CHRISTIANSEN, ROBERTSON — Structural & Civil Engineers

PROJECT: THE WORLD TRADE CENTER | TITLE: R.I.S.T. - PH CONNECTION DETAILS - PH ROOF | DATE: 12/24/73

REVISIONS

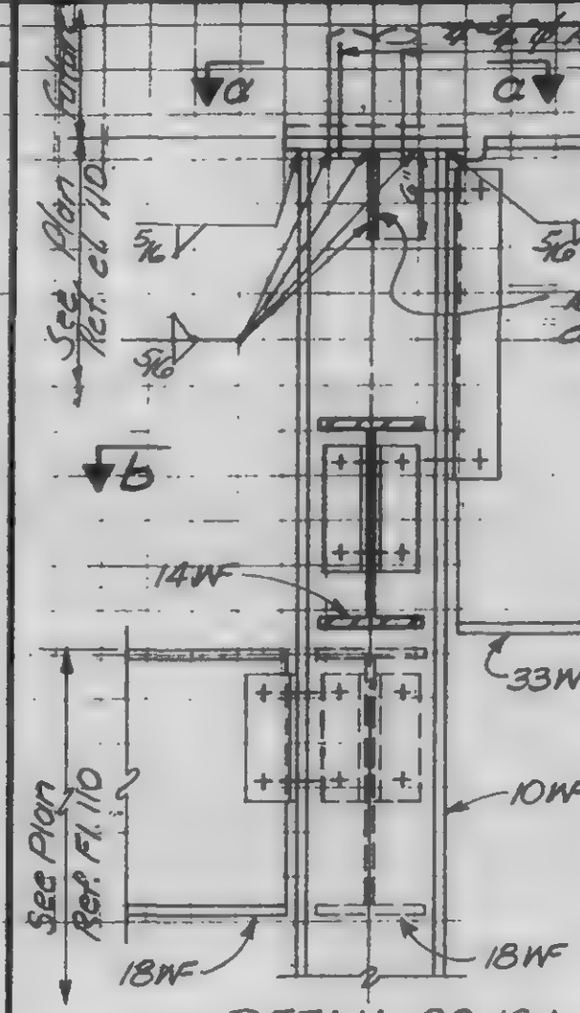

DETAIL 20-13A

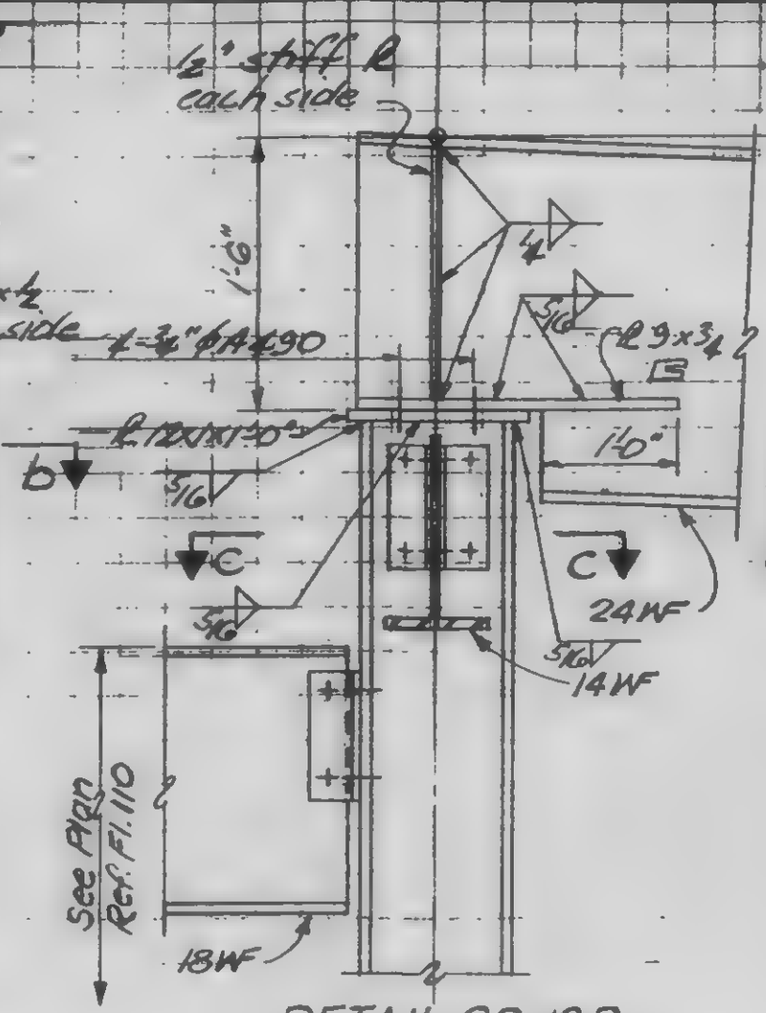

DETAIL 20-13B

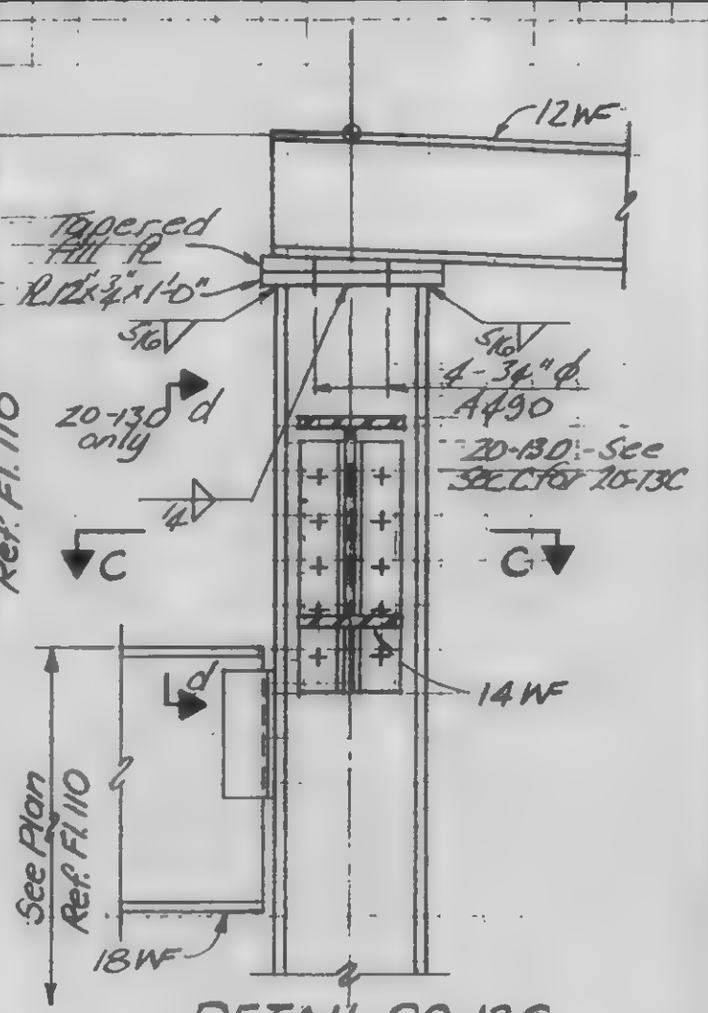

DETAIL 20-13C

DETAIL 20-13D as noted

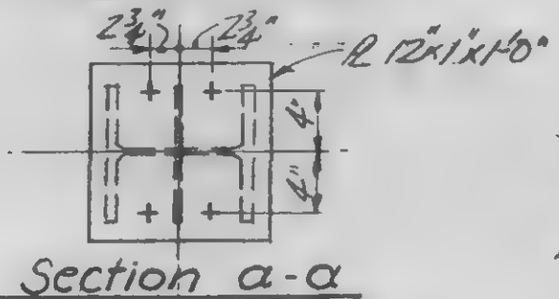

Section a-a

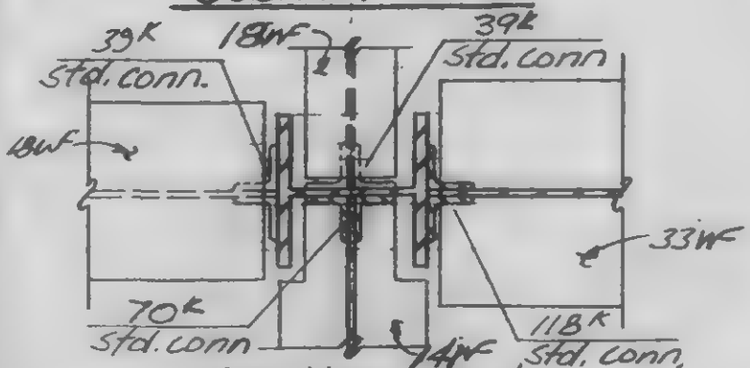

Section b-b

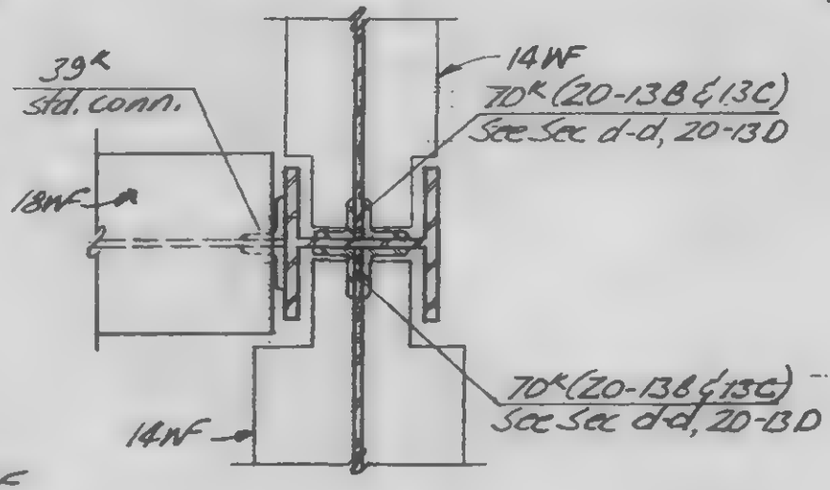

Section c-c

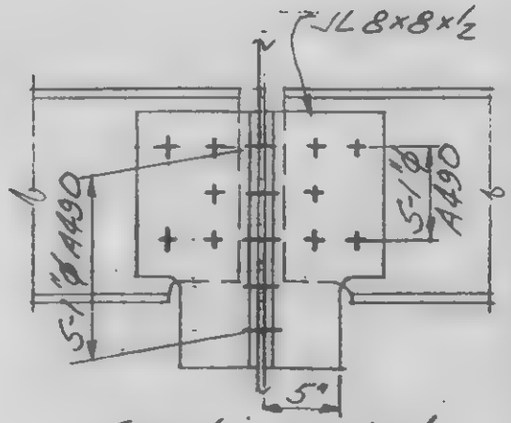

Section d-d
20-13D only

LICENSED PROFESSIONAL ENGINEER — LESLIE E. ROBERTSON — No 34360 — UNIVERSITY OF THE STATE OF NEW YORK

DESIGNED

DRAWN S.C.

REVIEWED

9-B20-13.1

SKILLING, HELLE, CHRISTIANSEN, ROBERTSON — Structural & Civil Engineers

PROJECT THE WORLD TRADE CENTER | TITLE EL. 107 – PH CONNECTION DETAILS – PH ROOF | DATE 12/21/70

REVISIONS

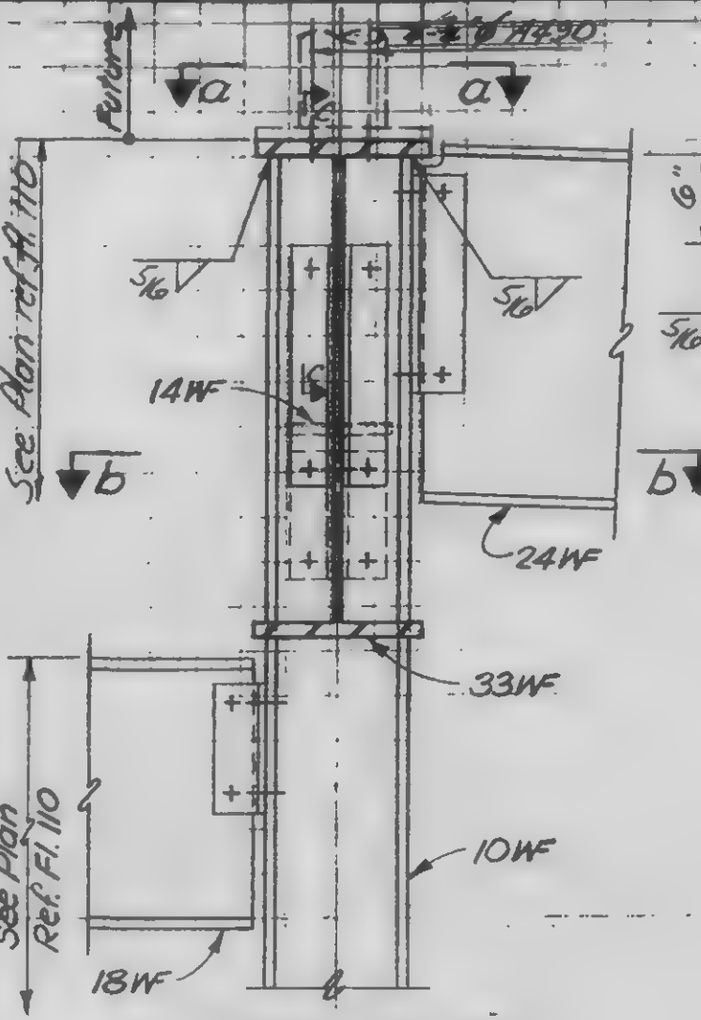

DETAIL 20-13E

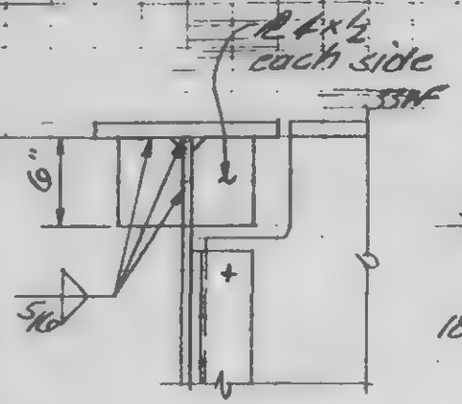

Section c-c

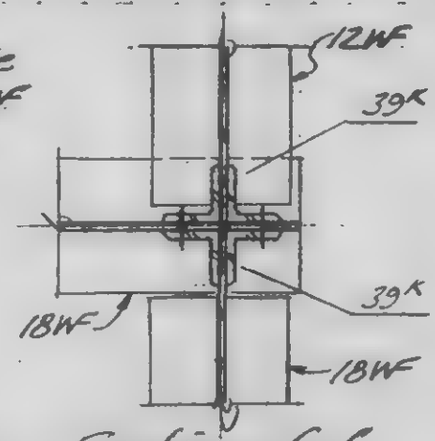

Section f-f

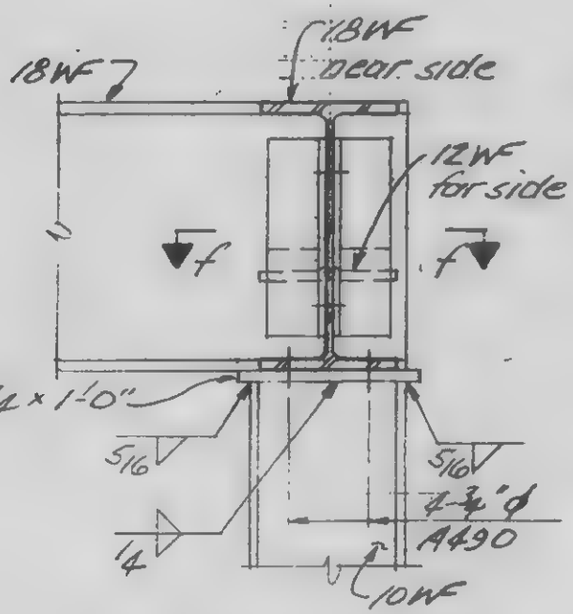

DETAIL 20-13F

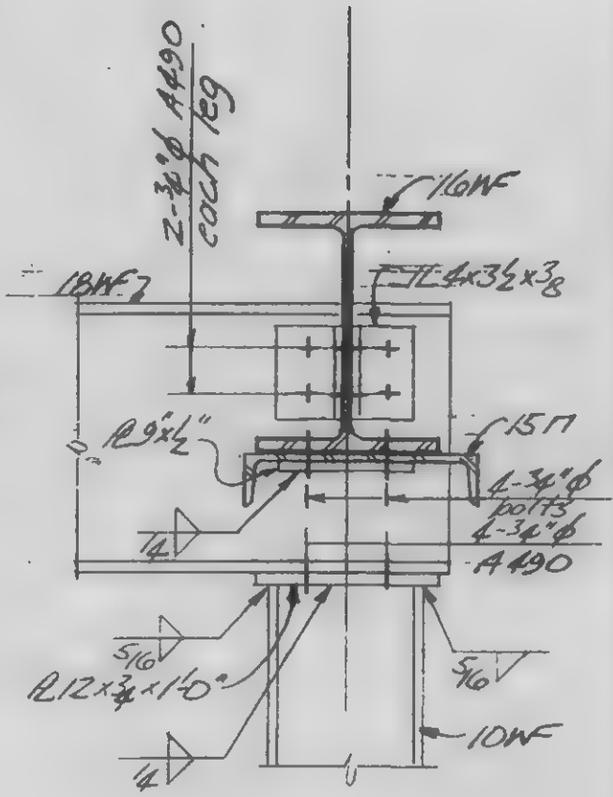

DETAIL 20-13G

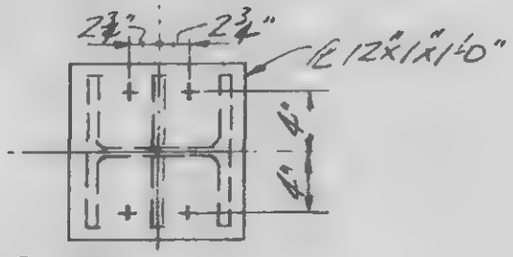

Section a-a

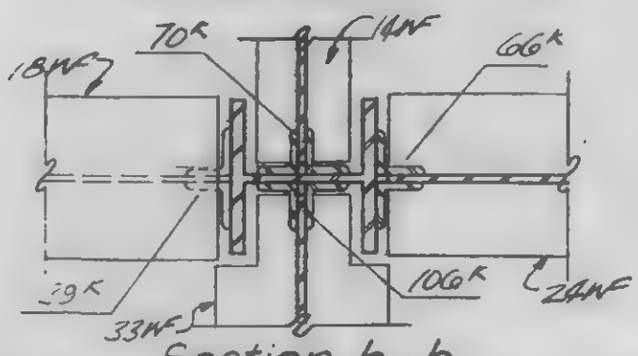

Section b-b

LICENSED PROFESSIONAL ENGINEER — LESLIE E. ROBERTSON — No 34360 — UNIVERSITY OF THE STATE OF NEW YORK

DESIGNED

DRAWN S.C.

REVIEWED

9-B20-13.2

SKILLING, HELLE, CHRISTIANSEN ROBERTSON — Structural & Civil Engineers

PROJECT: THE WORLD TRADE CENTER | TITLE: PL 107-PH CONNECTION DETAILS - 9TH FLOOR | DATE: 12-8-70

REVISIONS

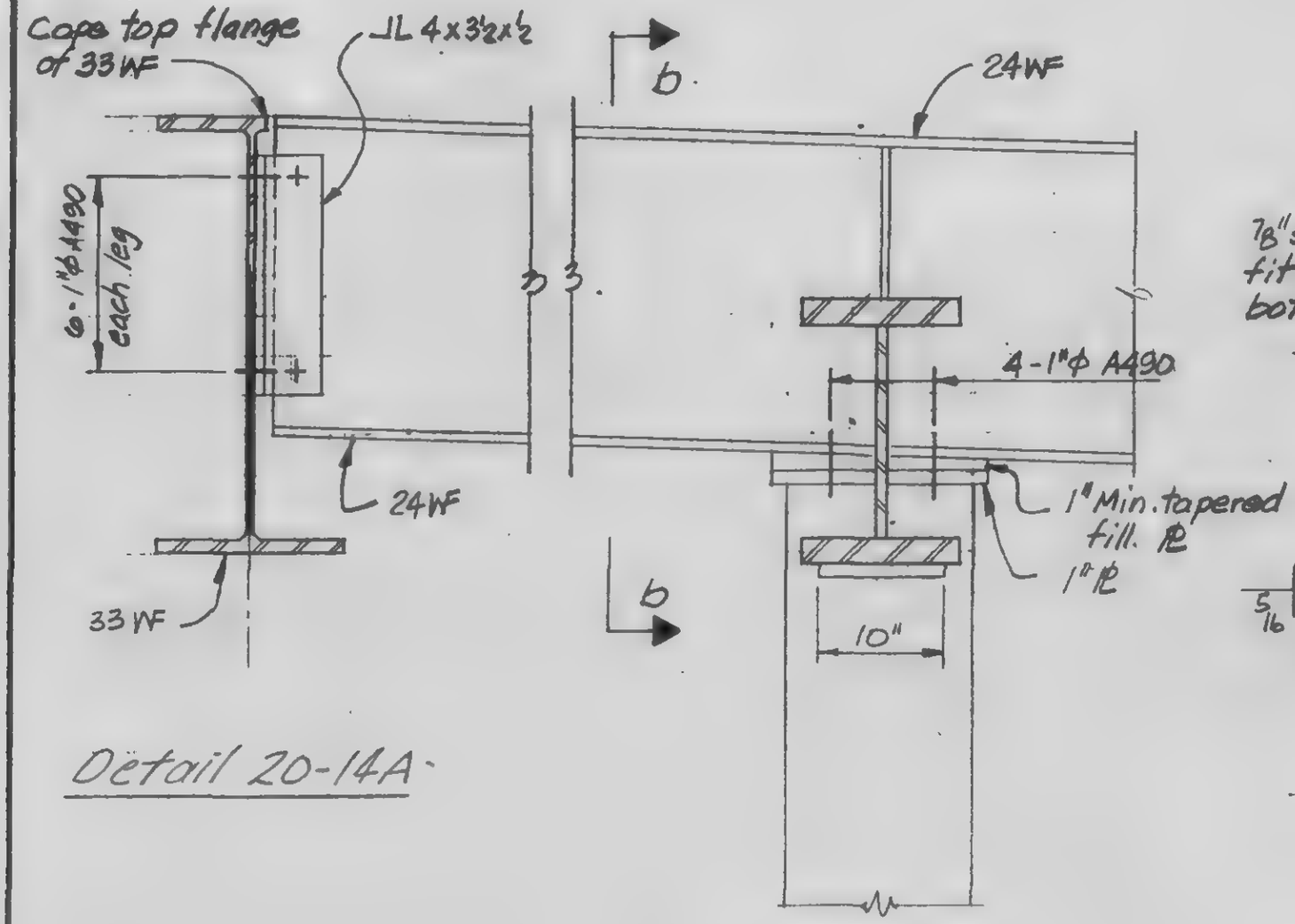

Detail 20-14A

Detail 20-14B

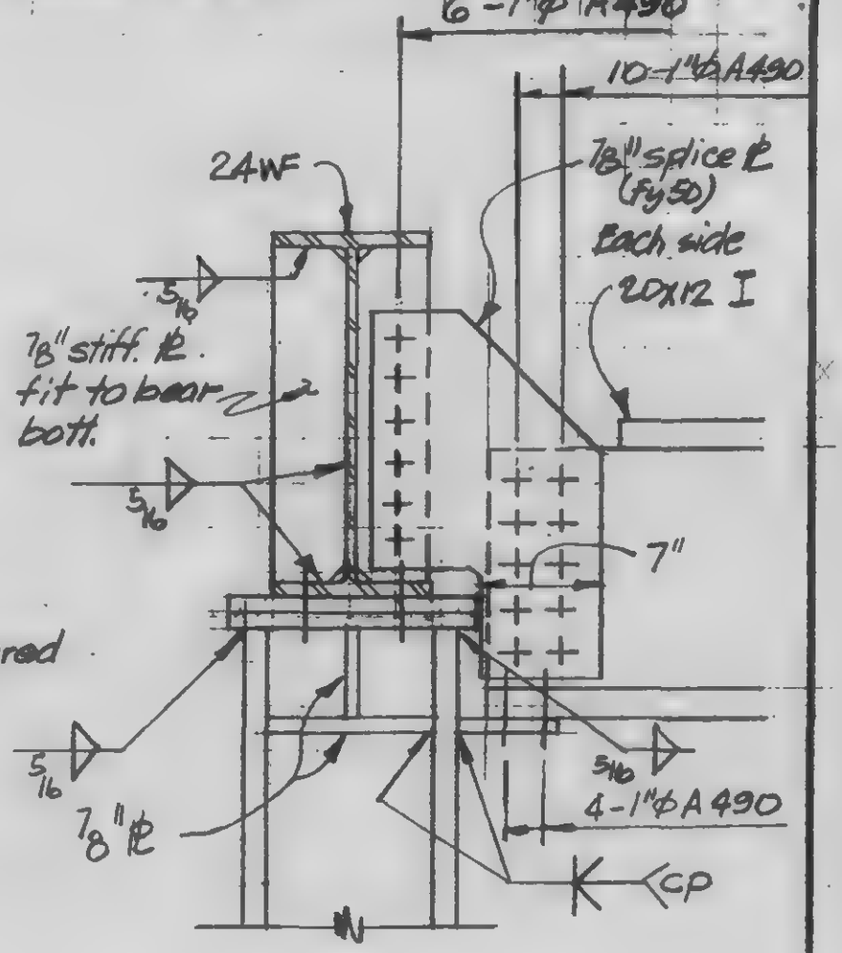

Section b-b

LICENSED PROFESSIONAL ENGINEER — LESLIE E. ROBERTSON — No 34360 — UNIVERSITY OF THE STATE OF NEW YORK

DESIGNED

DRAWN Holcomb

REVIEWED

9-B20-14.1

SKILLING, HELLE, CHRISTIANSEN, ROBERTSON — Structural & Civil Engineers

PROJECT: THE WORLD TRADE CENTER | TITLE: FL 107 PH CONNECTION DETAILS - PH ROOF | DATE: 12/21/70

REVISIONS

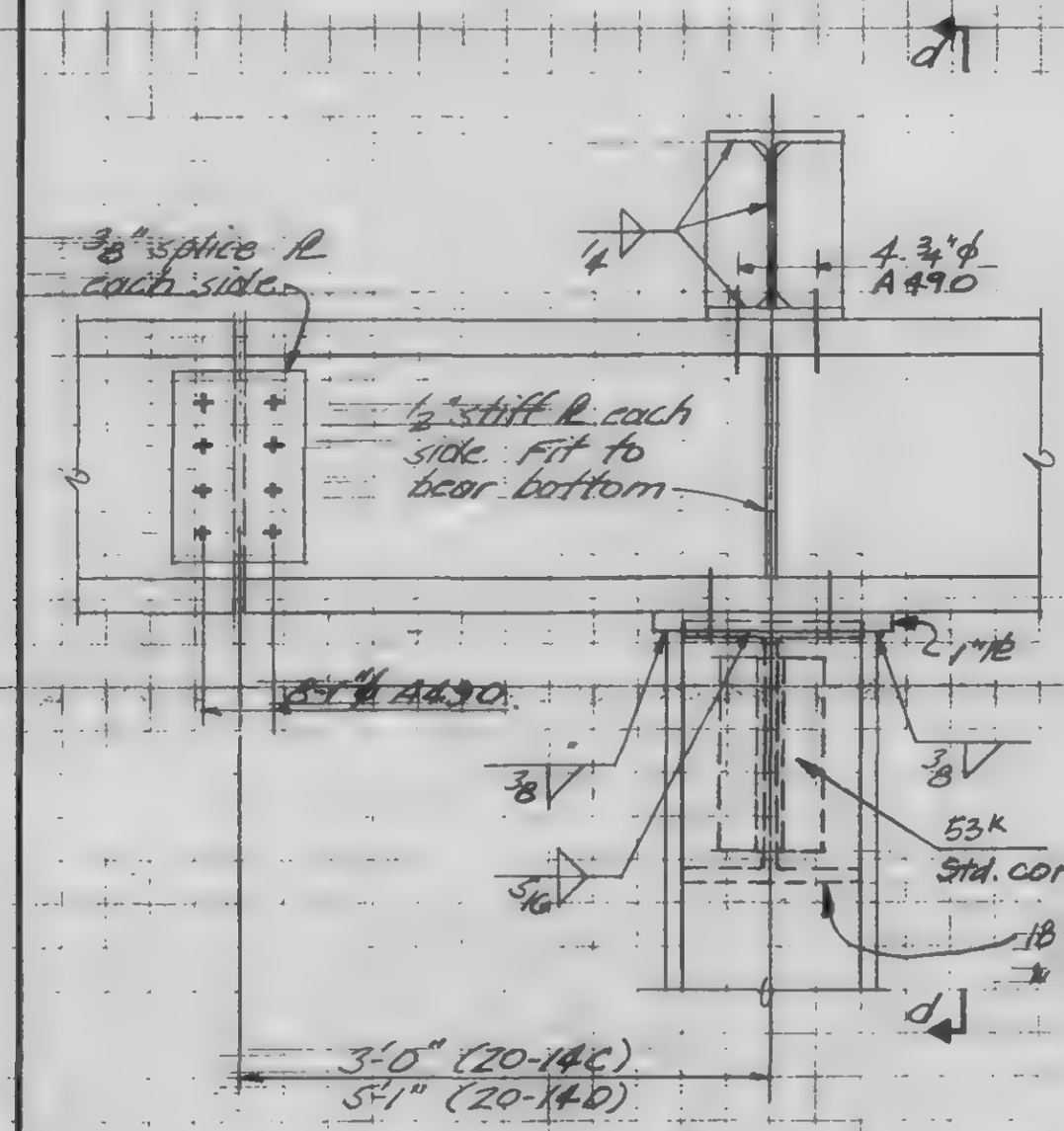

Section c-c

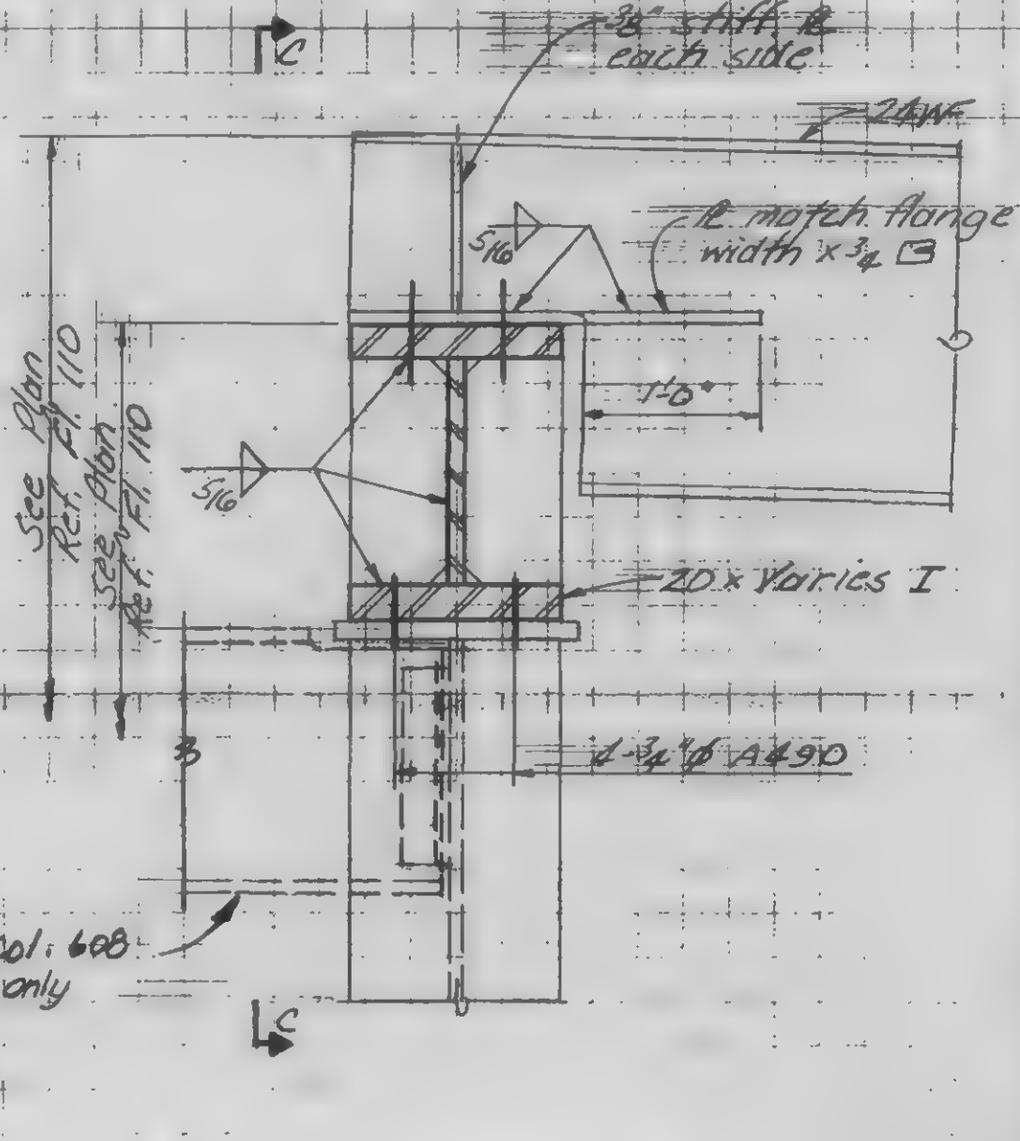

Section d-d

Detail 14C & 14D

LICENSED PROFESSIONAL ENGINEER — LESLIE E. ROBERTSON — No. 34360 — UNIVERSITY OF THE STATE OF NEW YORK

DESIGNED

DRAWN J. Hathaway

DEVELOPED

9-820-14.2

SKILLING, HELLE, CHRISTIANSEN, ROBERTSON — Structural & Civil Engineers

PROJECT: THE WORLD TRADE

SKILLING HELLE CHRISTIANSEN ROBERTSON — Structural & Civil Engineers

TITLE: PROJECT: [illegible] CONNECTION DETAILS

DATE: [illegible]

PREPARED BY:

APPROVED:

Sheet No.

DATE: 12/21/70

REVISIONS

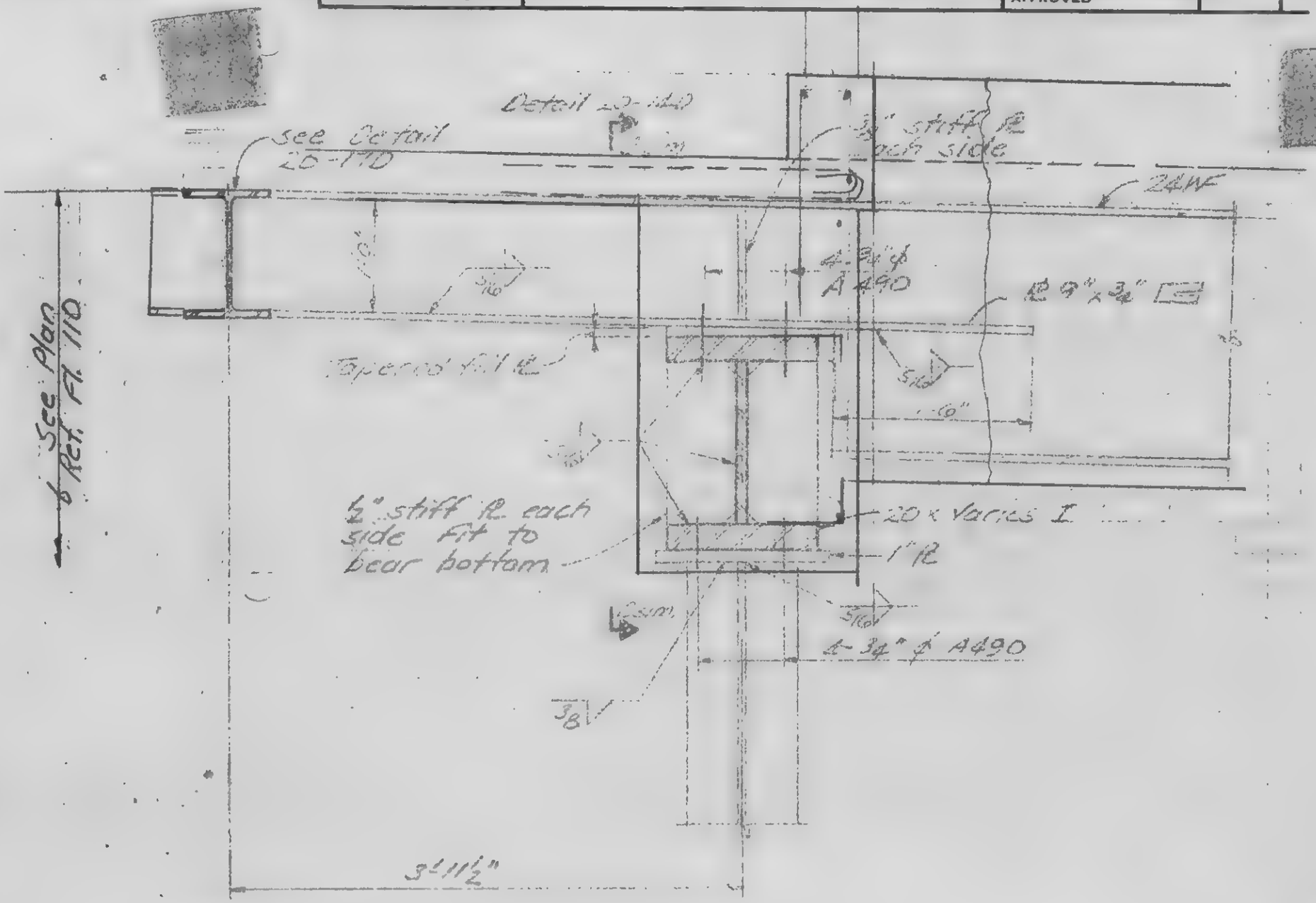

Detail 20-14E

LICENSED PROFESSIONAL ENGINEER LESLIE E. ROBERTSON No 34360 UNIVERSITY OF THE STATE OF NEW YORK

DRAWN: J. Adams

REVIEWED

920-14.3

SKILLING, HELLE, CHRISTIANSEN, ROBERTSON — Structural & Civil Engineers

PROJECT: THE WORLD TRADE CENTER | TITLE: FL 107 PH CONNECTION DETAILS - PH ROOF | DATE: 12/21/70

REVISIONS

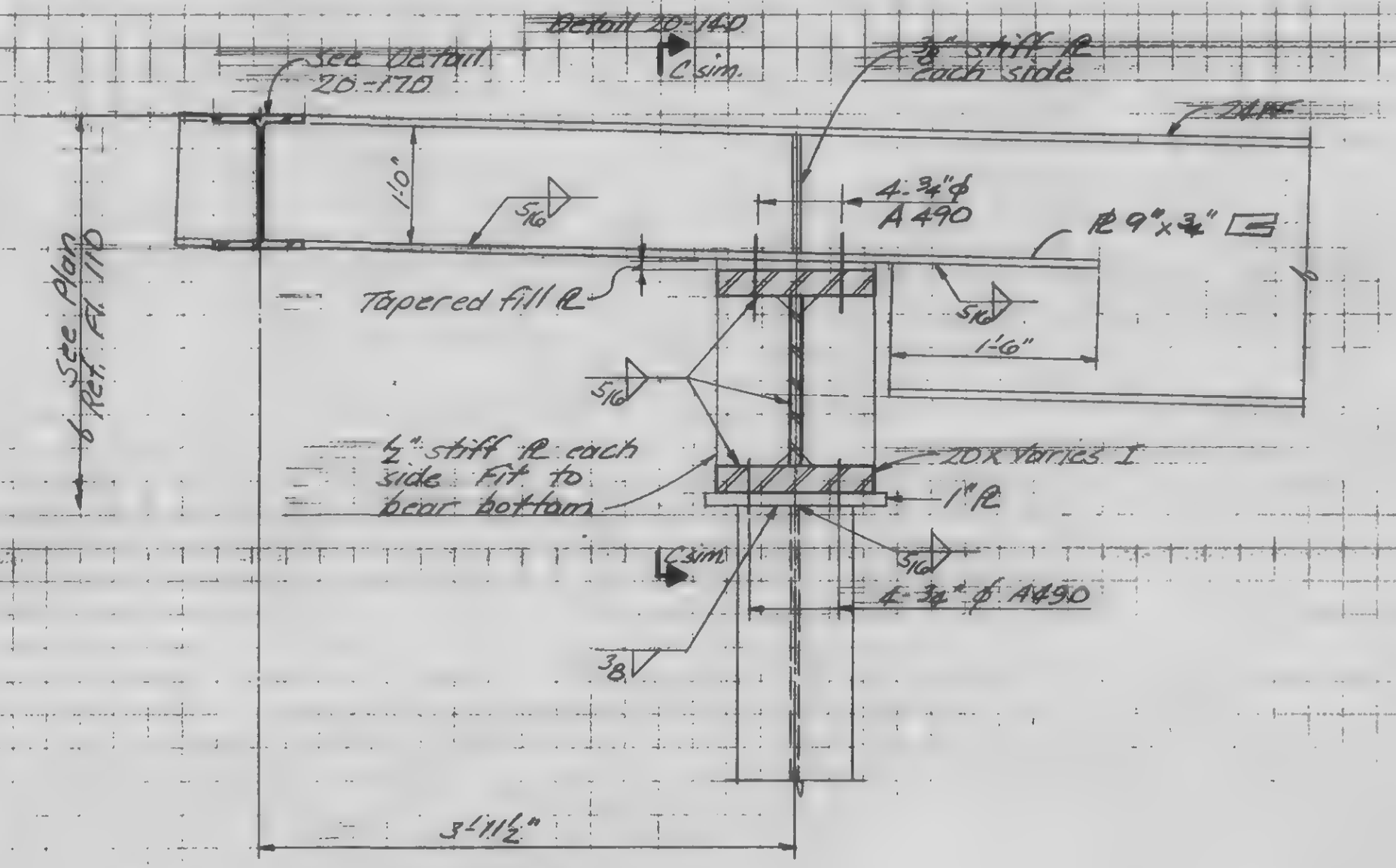

Detail 20-14E

LICENSED PROFESSIONAL ENGINEER — LESLIE E. ROBERTSON — No. 34360 — UNIVERSITY OF THE STATE OF NEW YORK

DESIGNED

DRAWN

REVIEWED

9-820-12.3

SKILLING, HELLE, CHRISTIANSEN ROBERTSON — Structural & Civil Engineers

PROJECT THE WORLD TRADE CENTER | TITLE FLOOR CONNECTION DETAILS — 7TH FLOOR | DATE 12/21/70

REVISIONS

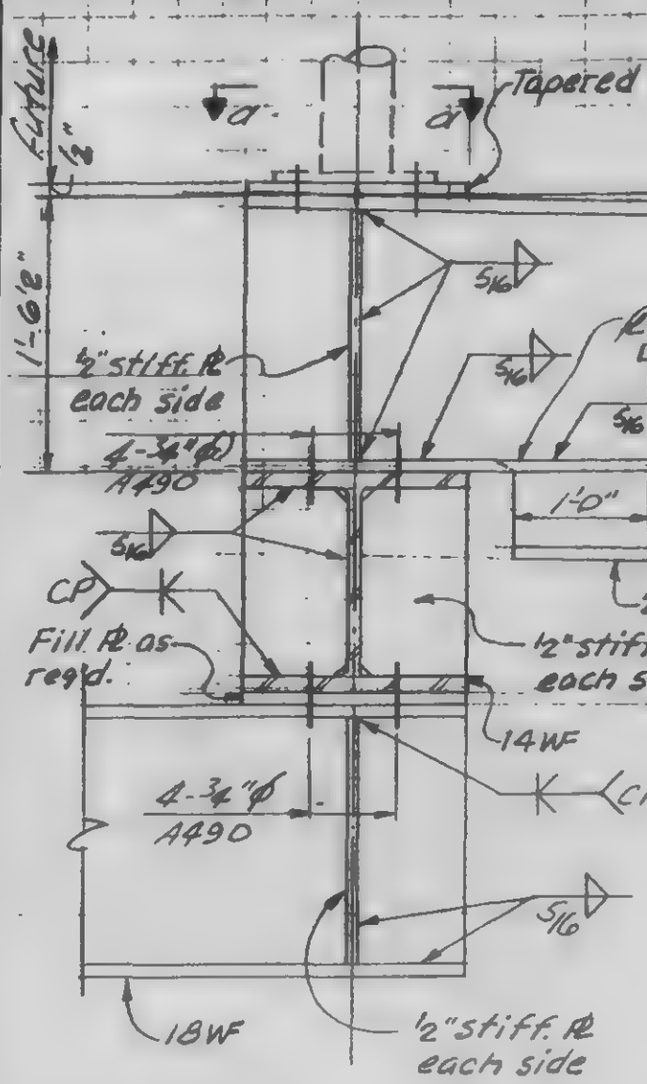

Detail 20-15A

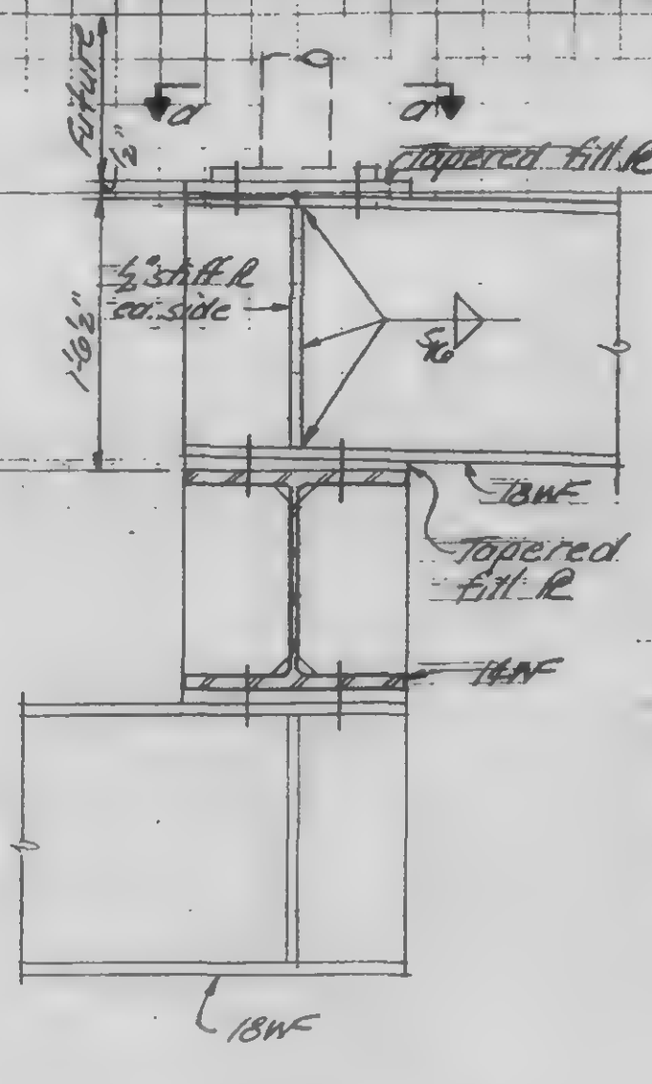

Detail 20-15B

For details not shown see 20-15A

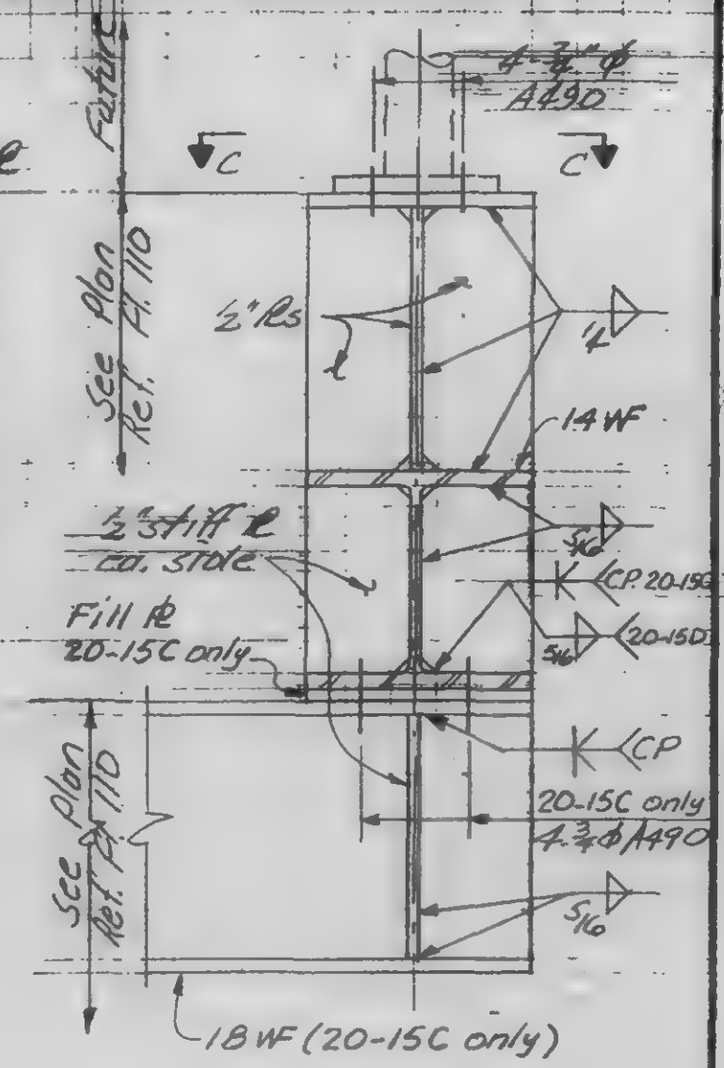

Detail 20-15C
Detail 20-15D as noted

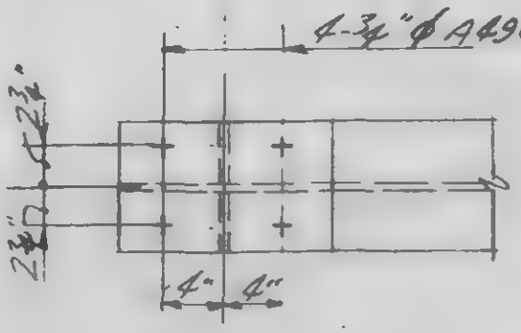

Section a-a

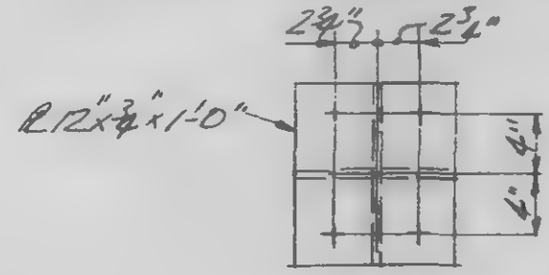

Section c-c

LICENSED PROFESSIONAL ENGINEER — LESLIE E. ROBERTSON — No 34360 — UNIVERSITY OF THE STATE OF NEW YORK

W. BREWER

DRAWN A. FRANQUI

REVIEWED

9-B20-15.1

WILLING, HELLE, CHRISTIANSEN, ROBERTSON — Structural & Civil Engineers

PROJECT: THE WORLD TRADE CENTER | TITLE: FL.107 PH CONNECTION DETAILS - PH ROOF | DATE: 12/21/70

REVISIONS

3-5-71

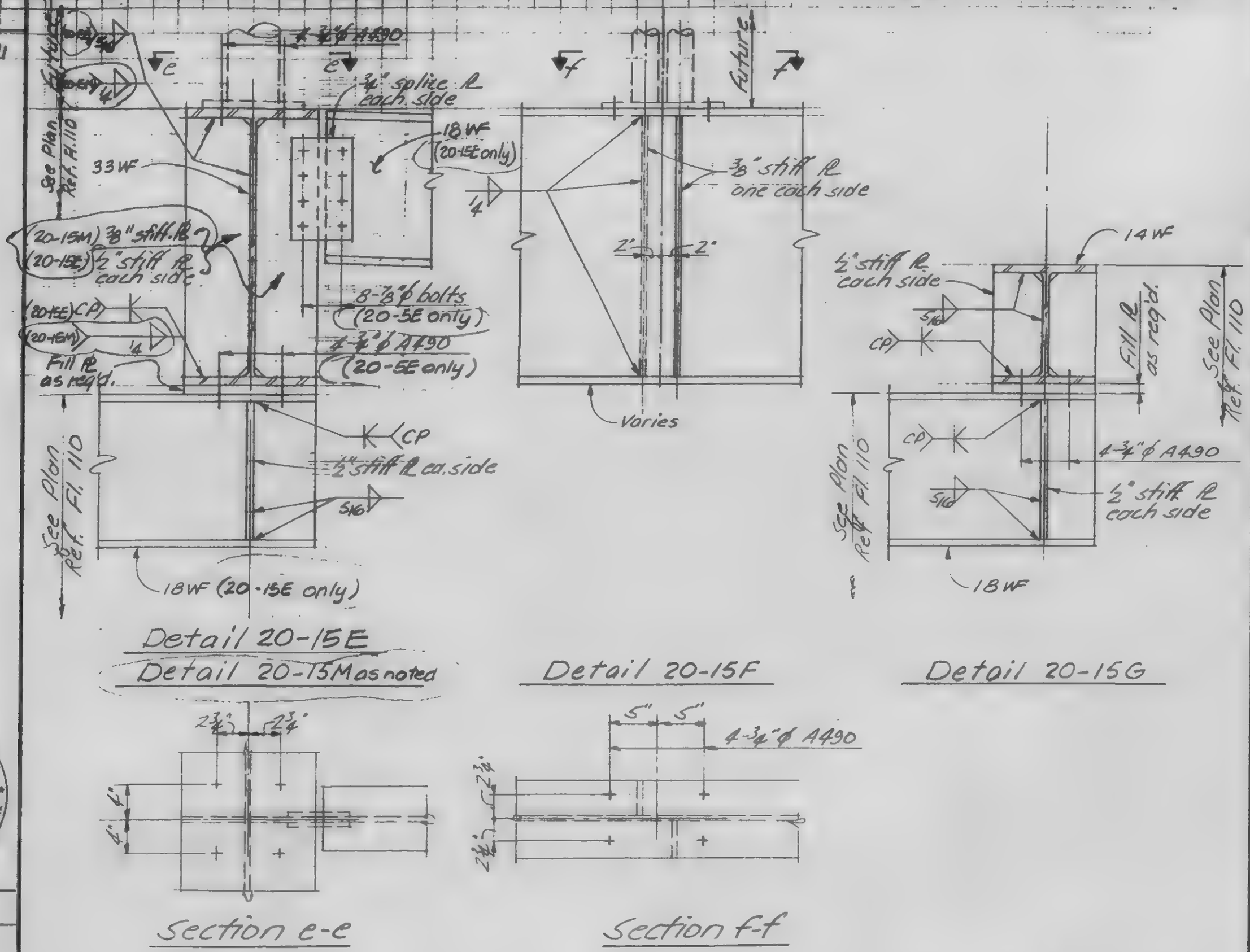

LICENSED PROFESSIONAL ENGINEER
LESLIE E. ROBERTSON
No 34360
UNIVERSITY OF THE STATE OF NEW YORK

DESIGNED: W. BREWER

DRAWN: F. FRANQUI

REVIEWED

9-B20-15.2

SKILLING, HELLE, CHRISTIANSEN ROBERTSON — Structural & Civil Engineers

PROJECT THE WORLD TRADE CENTER | TITLE FL.107 PH CONNECTION DETAILS - PH ROOF | DATE 12-21-73

REVISIONS

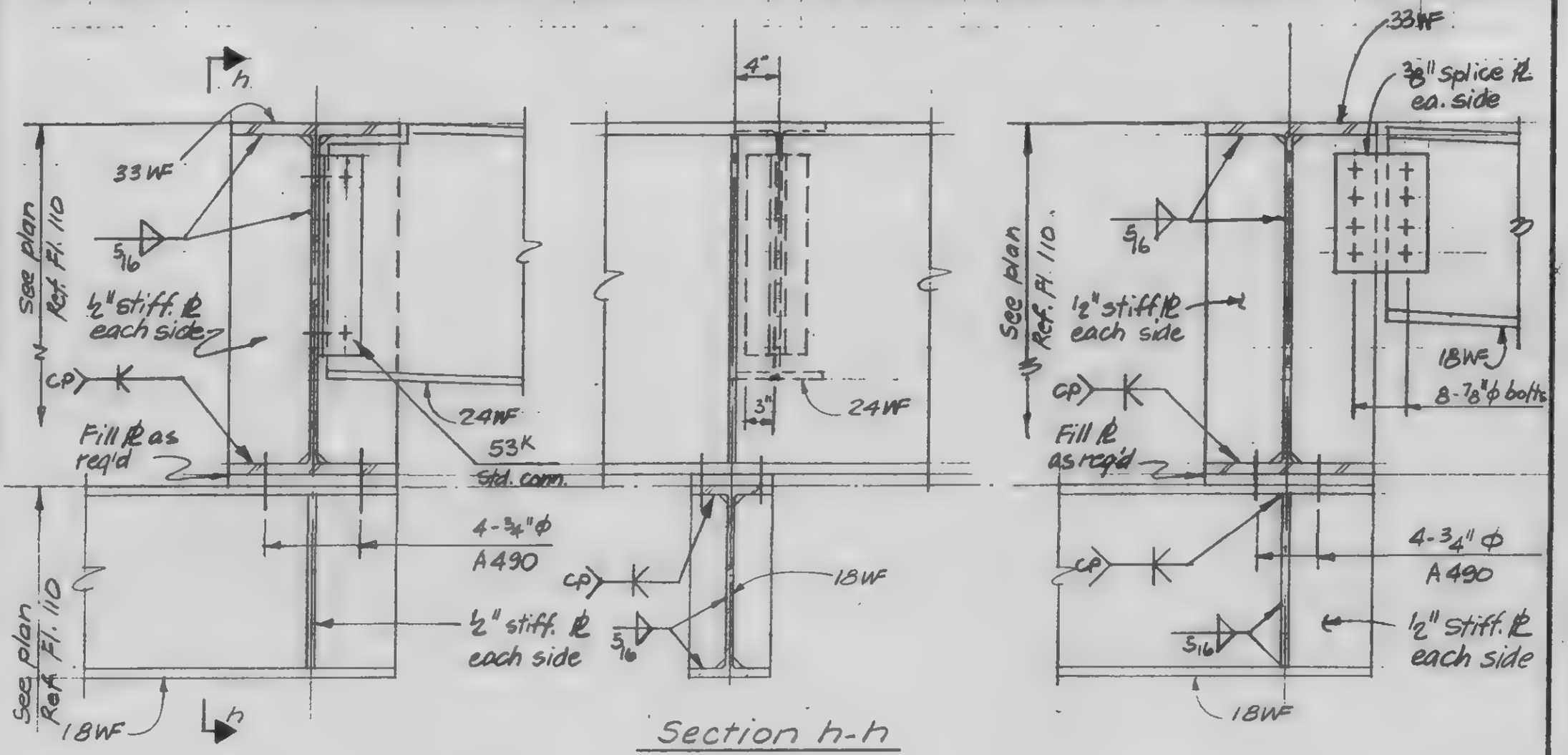

Section h-h

Detail 20-15H

Detail 20-15K

LICENSED PROFESSIONAL ENGINEER LESLIE E. ROBERTSON UNIVERSITY OF THE STATE OF NEW YORK No 34360

DESIGNED W. BREWER

DRAWN A. FRANQUI

REVIEWED

9-B20-15.3

SKILLING, HELLE, CHRISTIANSEN ROBERTSON — Structural & Civil Engineers

PROJECT: THE WORLD TRADE CENTER | TITLE: FL 107 PH CONNECTION DETAILS - PH ROOF | DATE: 12-27-70

REVISIONS

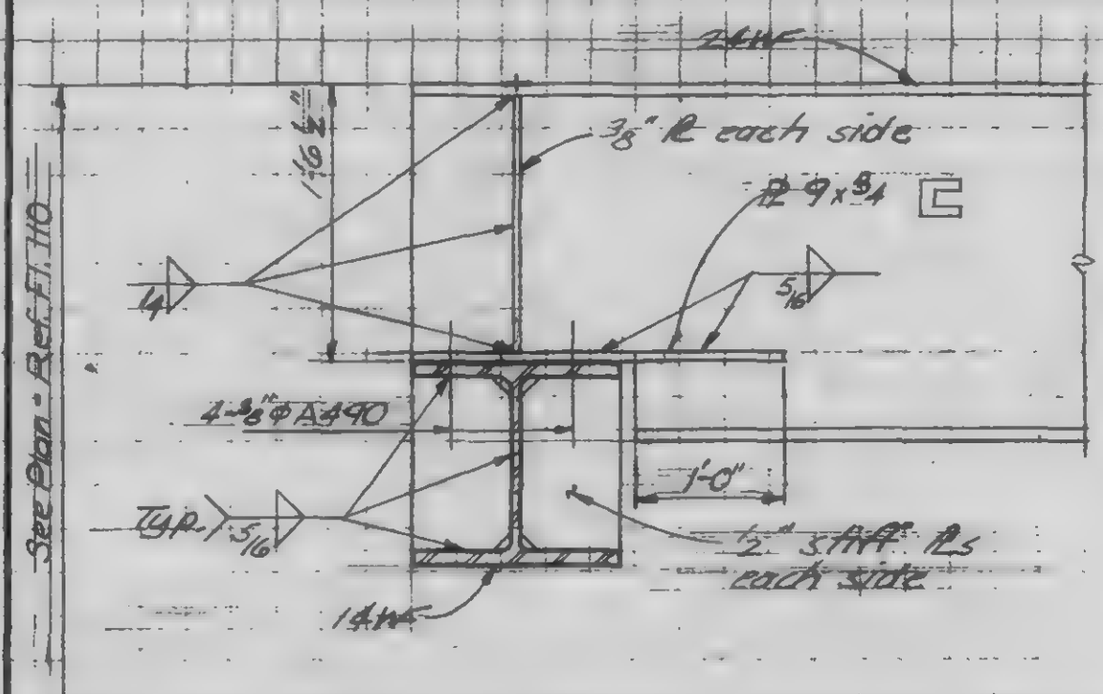

Detail 20-16A

LICENSED PROFESSIONAL ENGINEER — LESLIE E. ROBERTSON — UNIVERSITY OF THE STATE OF NEW YORK — NO. 24980

DESIGNED

DRAWN J. Holmes

REVIEWED

S-820-16

SKILLING HELLE CHRISTIANSEN ROBERTSON — Structural & Civil Engineers

PROJECT: THE WORLD TRADE CENTER | TITLE: FL 107 PH CONNECTION DETAILS - PH ROOF | DATE: 12/01/70

REVISIONS

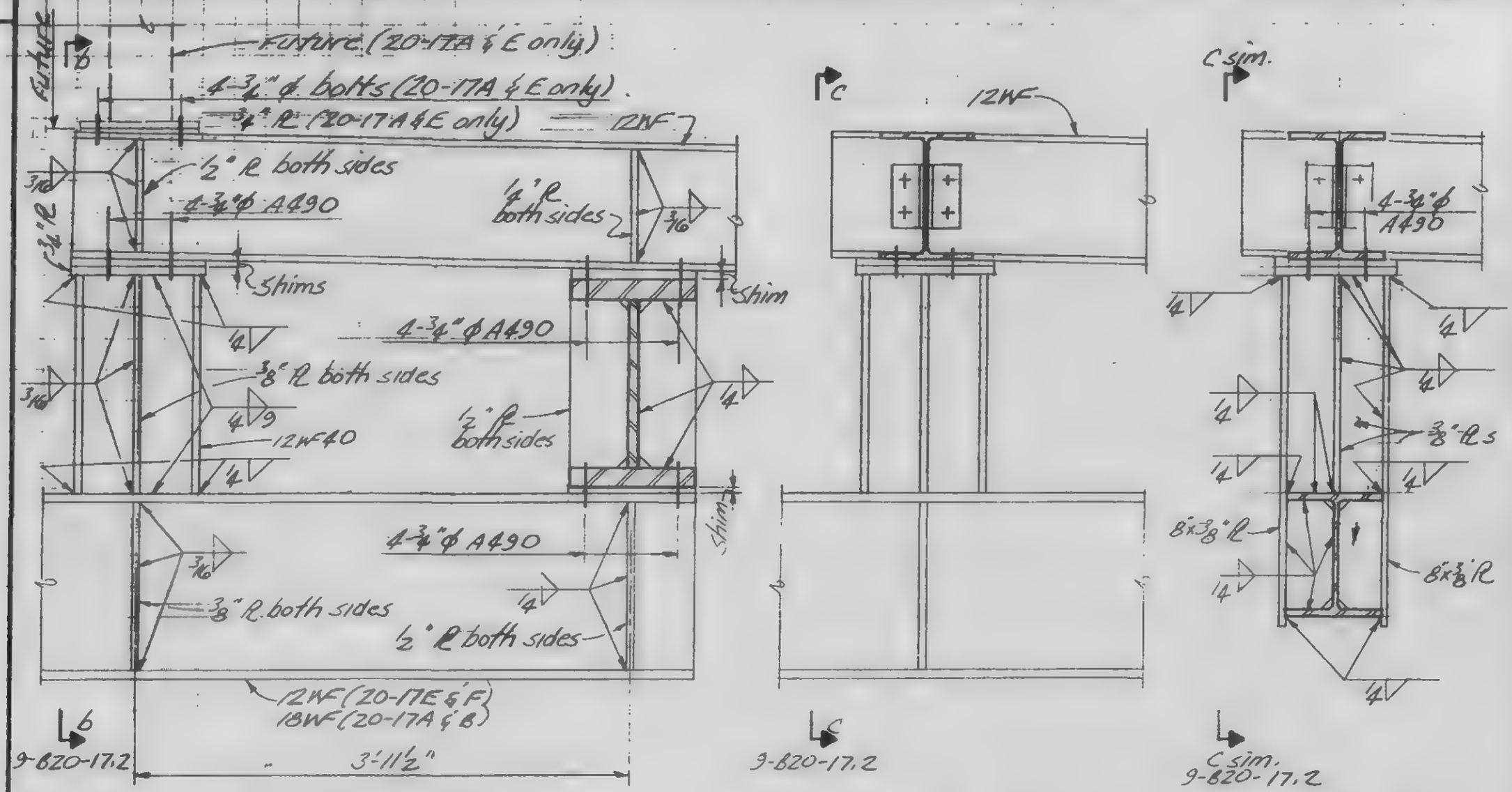

Detail 20-17A & E as noted
Detail 20-17B & F

Detail 20-17C
Note: For balance of detail and information not shown see Det. 20-17B

Detail 20-17D
Note: For balance of detail see 20-14E

LICENSED PROFESSIONAL ENGINEER
LESLIE E. ROBERTSON
No 34360
UNIVERSITY OF THE STATE OF NEW YORK

DESIGNED

DRAWN
Adams

REVIEWED

9-B20-17.1

SKILLING, HELLE, CHRISTIANSEN, ROBERTSON — Structural & Civil Engineers

PROJECT: THE WORLD TRADE CENTER | TITLE: FLOOR BM CONNECTION DETAILS - BM ROOF | DATE: 12/21/70

REVISIONS

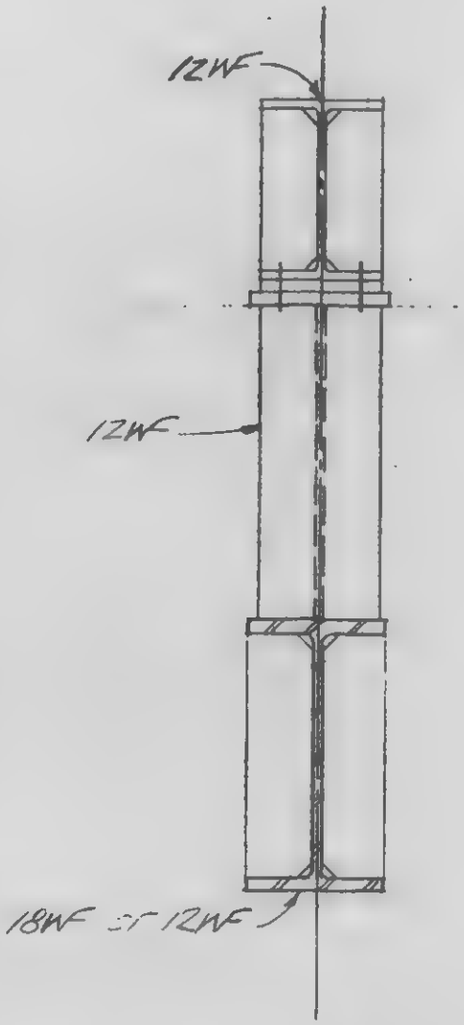

Section b-b

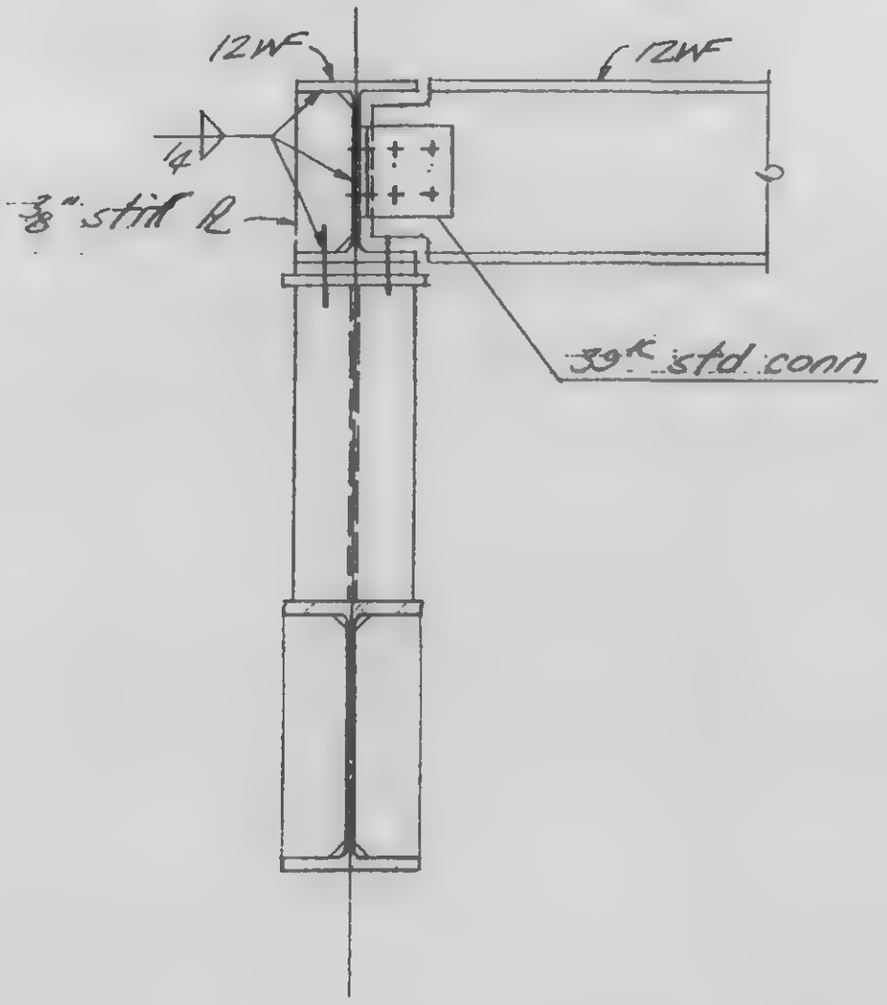

Section c-c

LICENSED PROFESSIONAL ENGINEER
LESLIE E. ROBERTSON
No 34360
UNIVERSITY OF THE STATE OF NEW YORK

DESIGNED

DRAWN
Adams

REVIEWED

9-B20-17.2

SKILLING, HELLE, CHRISTIANSEN, ROBERTSON — Structural & Civil Engineers

PROJECT: THE WORLD TRADE CENTER | TITLE: FL.107-PH. CONNECTION DETAILS-PH ROOF | DATE: 3-5-71

REVISIONS

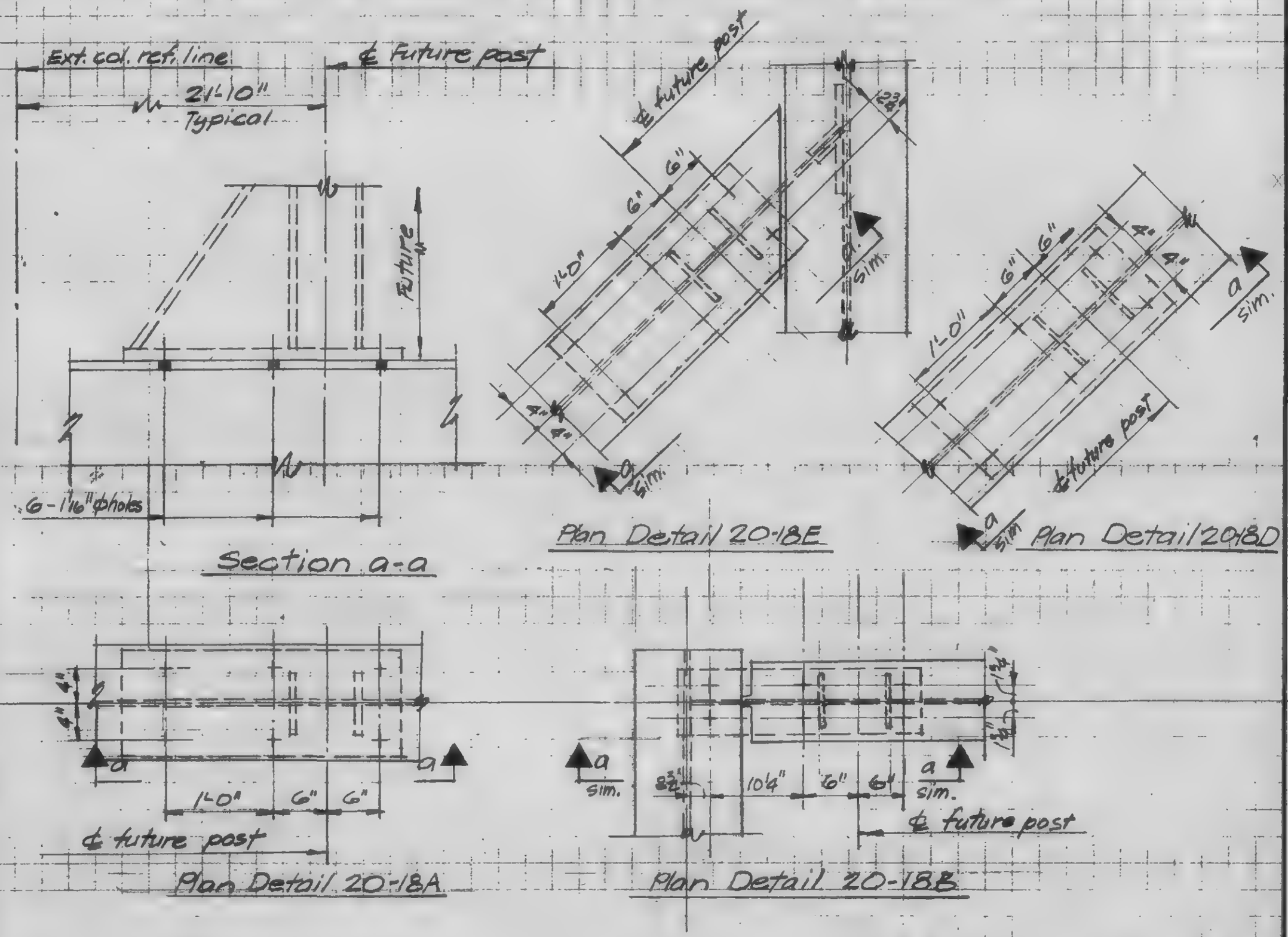

LICENSED PROFESSIONAL ENGINEER
LESLIE E. ROBERTSON
No. 34360
UNIVERSITY OF THE STATE OF NEW YORK

DESIGNED: WAB
DRAWN: P Ozda
REVIEWED:

9-B20-18

SKILLING, HELLE, CHRISTIANSEN, ROBERTSON — Structural & Civil Engineers

PROJECT: THE WORLD TRADE CENTER | TITLE: FL. 107 - PH CONNECTION DETAILS - POSTS & MISC. | DATE: 4-1-70

REVISIONS

5/27/70

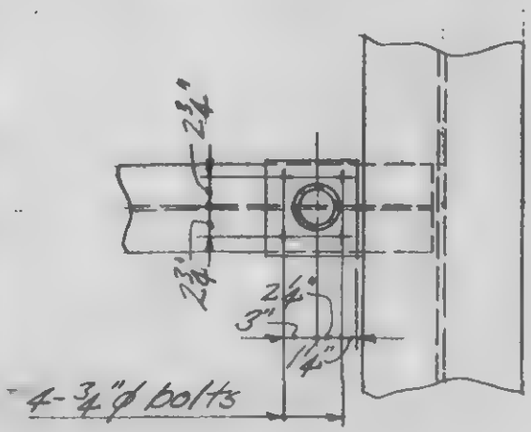

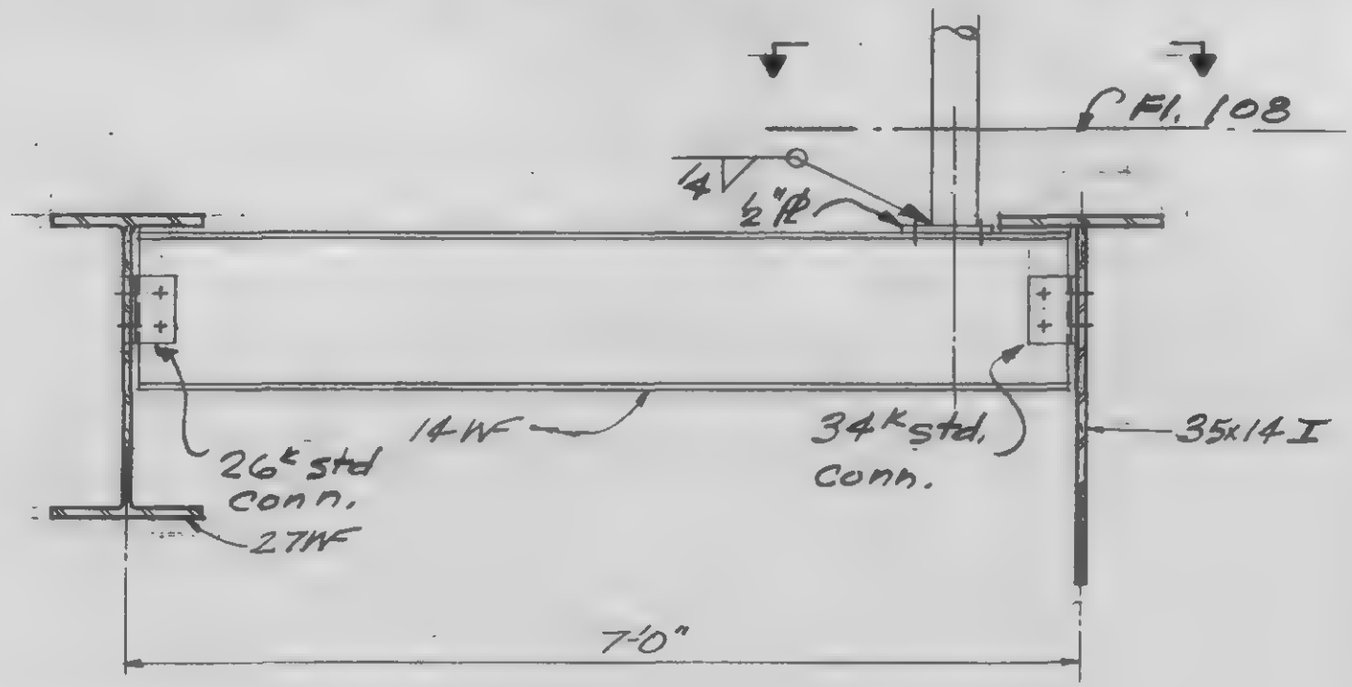

Detail 21-1A

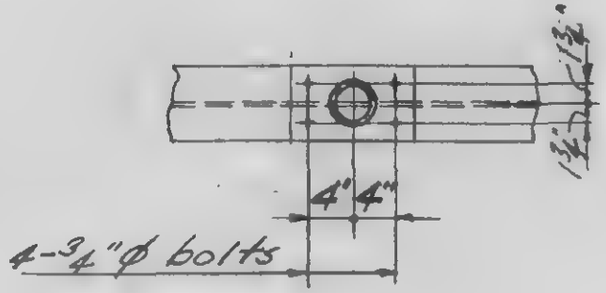

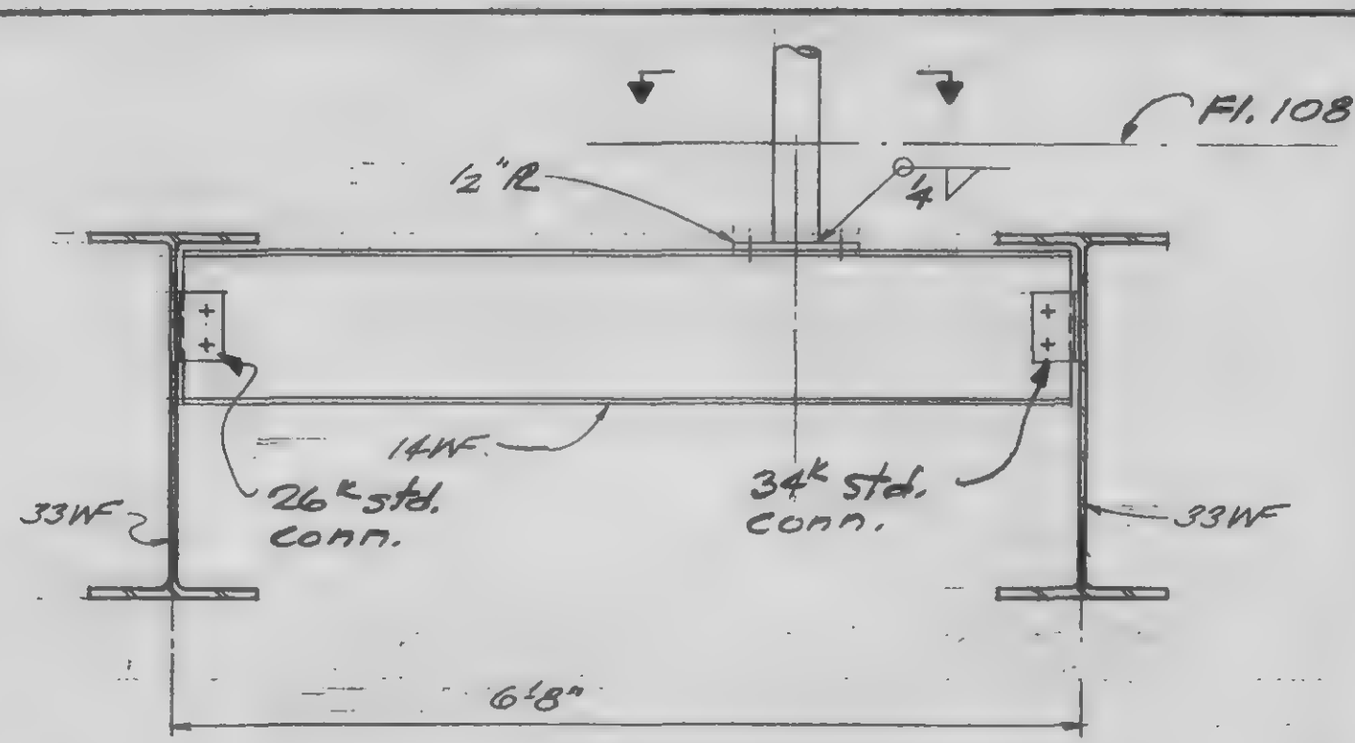

Detail 21-1B

LICENSED PROFESSIONAL ENGINEER — LESLIE E. ROBERTSON — No 34360 — UNIVERSITY OF THE STATE OF NEW YORK

DESIGNED

DRAWN J. Adams

REVIEWED LD Brewer

9-AB21-1.7

SKILLING, HELLE, CHRISTIANSEN, ROBERTSON — Structural & Civil Engineers

PROJECT: THE WORLD TRADE CENTER | TITLE: FL.107-PH CONNECTION DETAILS-POSTS & MISC | DATE: 4-1-70

REVISIONS

5/27/70
6/15/70

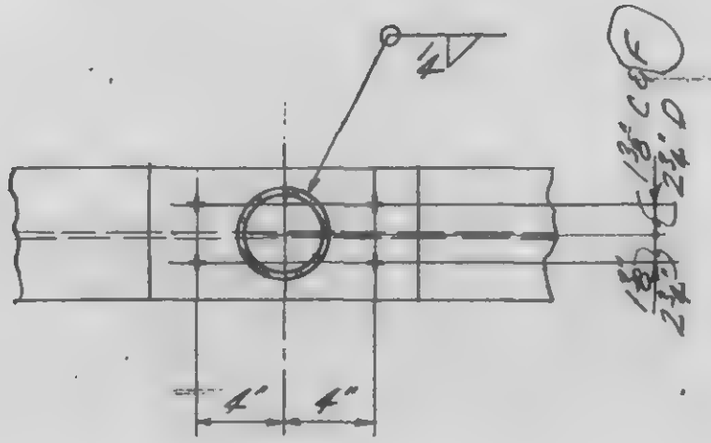

Section a-a

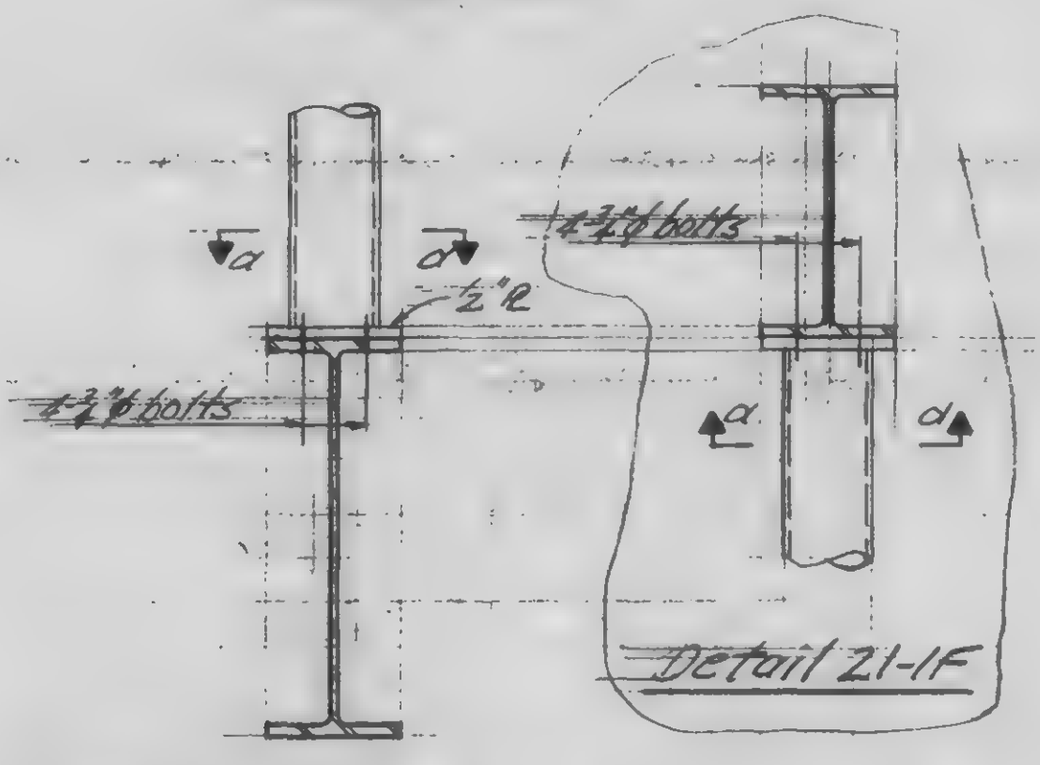

Detail 21-1C&D

Detail 21-1F

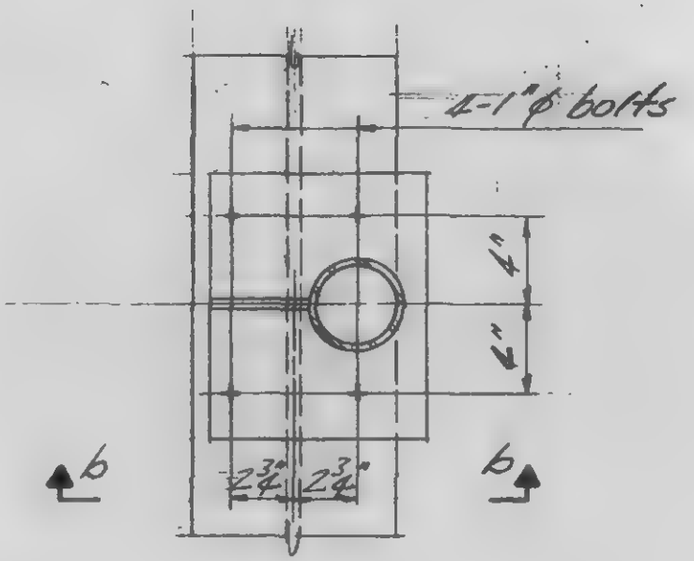

Plan

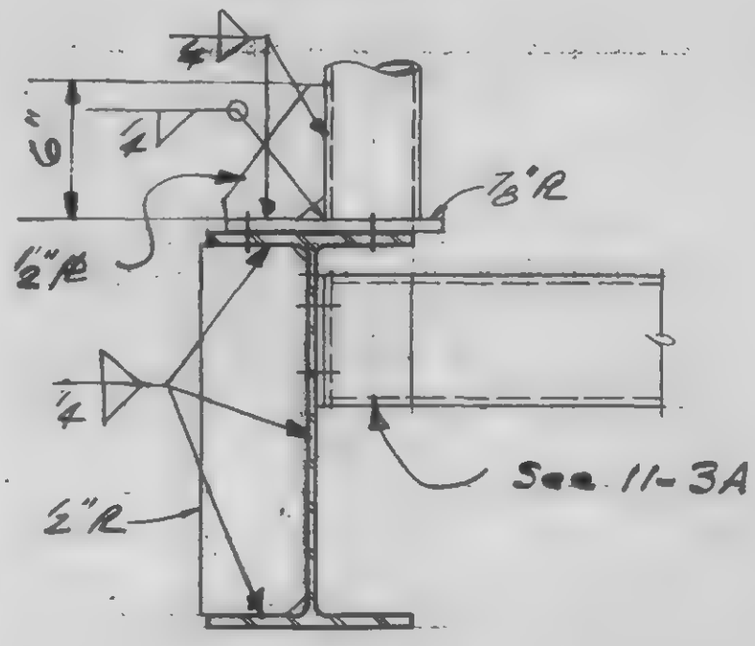

Section b-b

Detail 21-1E

LICENSED PROFESSIONAL ENGINEER
LESLIE E. ROBERTSON
No. 34290
UNIVERSITY OF THE STATE OF NEW YORK

DESIGNED

DRAWN
J. Adams

REVIEWED
C. J. Brewer

9-1821-12

SKILLING, HELLE, CHRISTIANSEN, ROBERTSON — Structural & Civil Engineers

PROJECT: THE WORLD TRADE CENTER | TITLE: FL.107-PH CONNECTION DETAILS - POSTS & MISC. | DATE: 4-1-70

REVISIONS

5/27/70

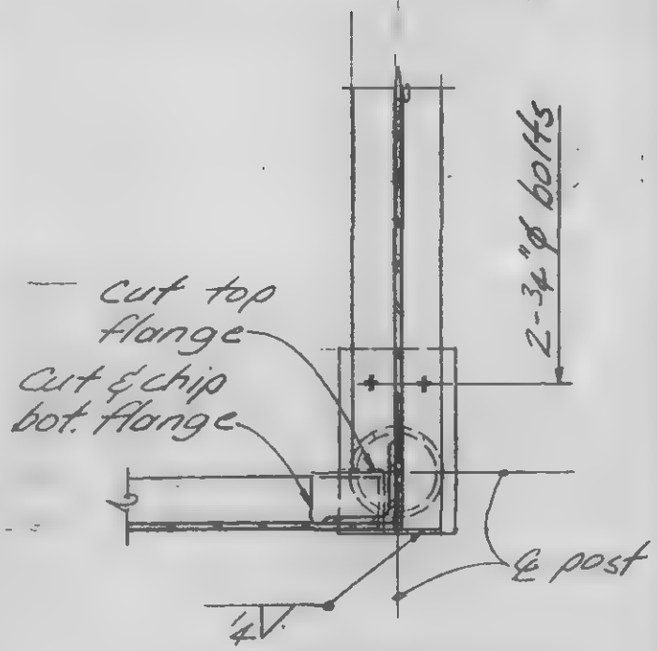

Section a-a

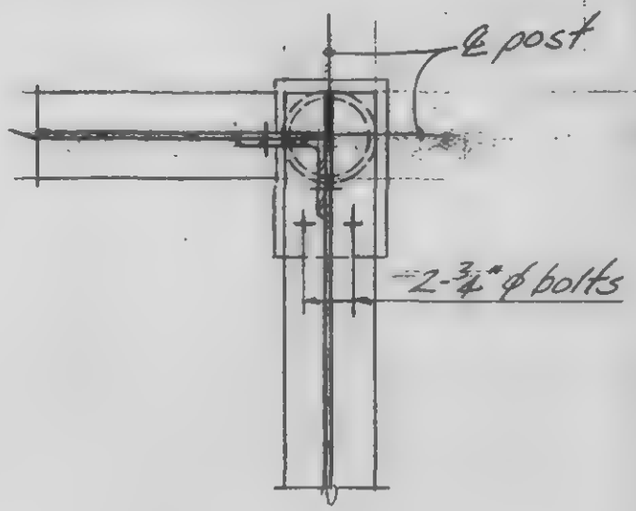

Section b-b

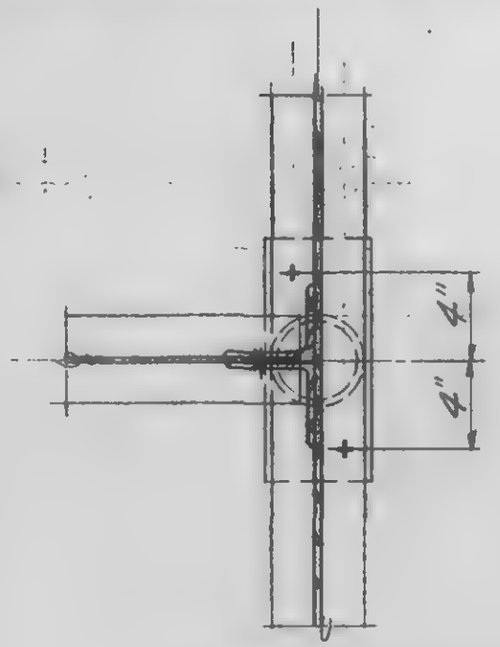

Section c-c

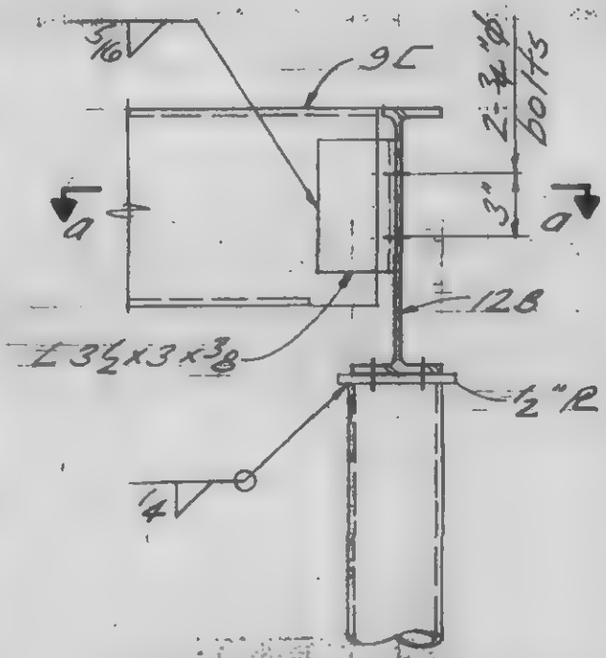

Elevation

Detail 21-2A

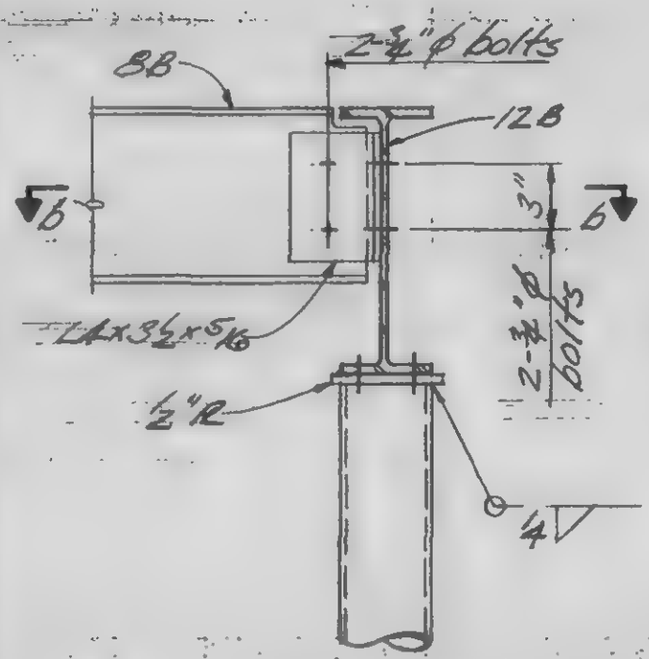

Elevation

Detail 21-2B

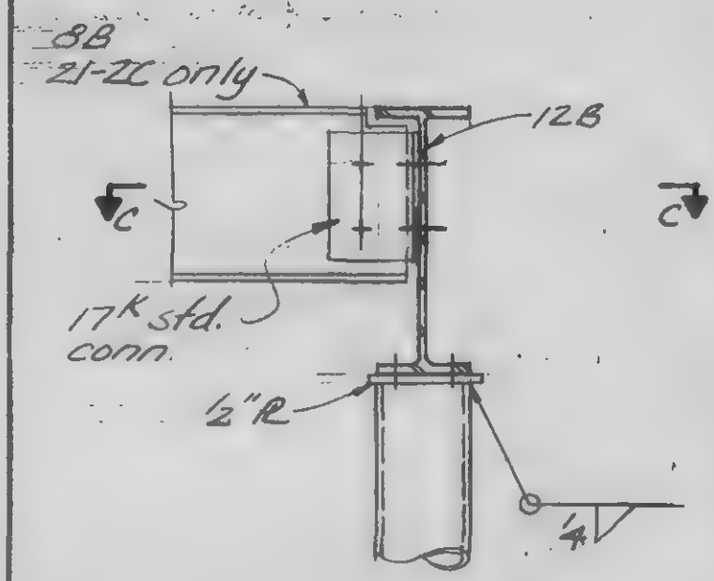

Elevation

Detail 21-2C as noted

Detail 21-2D

LICENSED PROFESSIONAL ENGINEER — LESLIE E. ROBERTSON — No. 34360 — UNIVERSITY OF THE STATE OF NEW YORK

DESIGNED

DRAWN J. Adams

REVIEWED W. Brewer

9-A621-2.1

SKILLING, HELLE, CHRISTIANSEN, ROBERTSON — Structural & Civil Engineers

PROJECT: THE WORLD TRADE CENTER | TITLE: FLOOR 107-PH CONNECTION DETAILS-POSTS & MISC | DATE: 4-1-70

REVISIONS

5/27/70

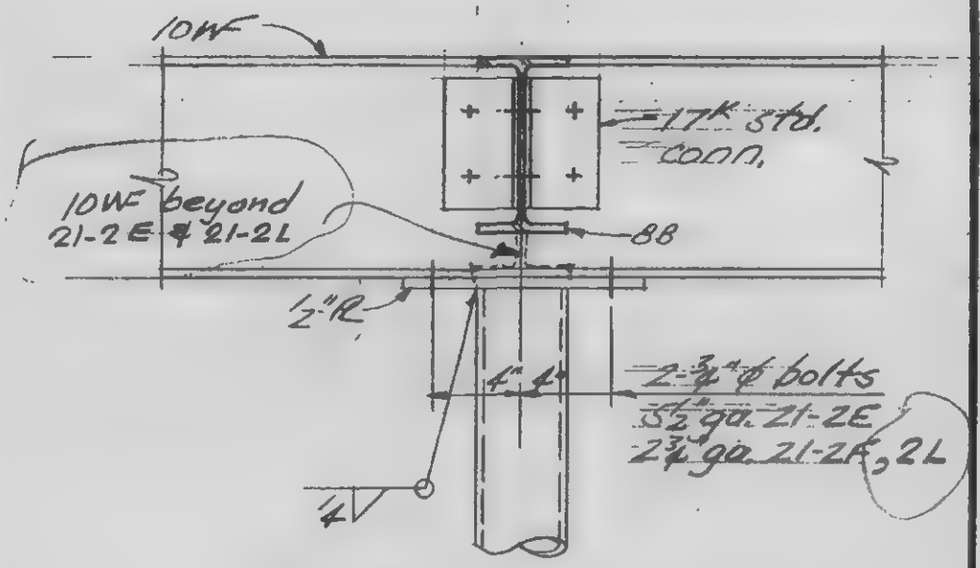

Detail 21-2E
Detail 21-2F & 2L

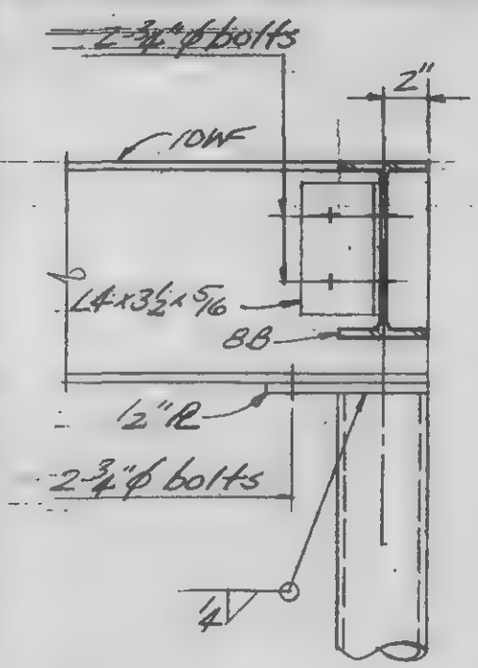

Detail 21-2G

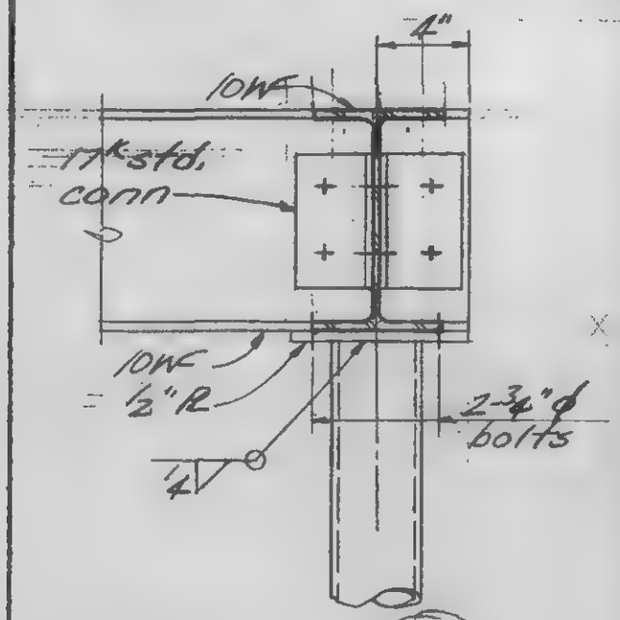

Detail 21-2H

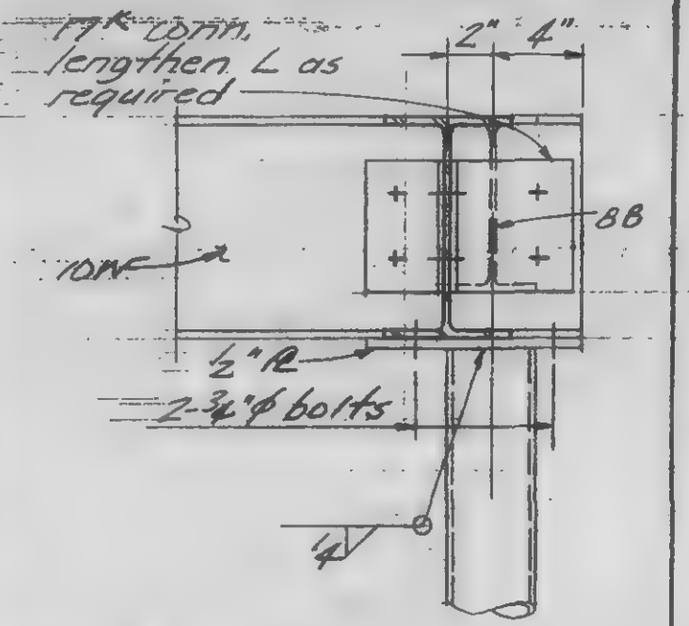

Detail 21-2J

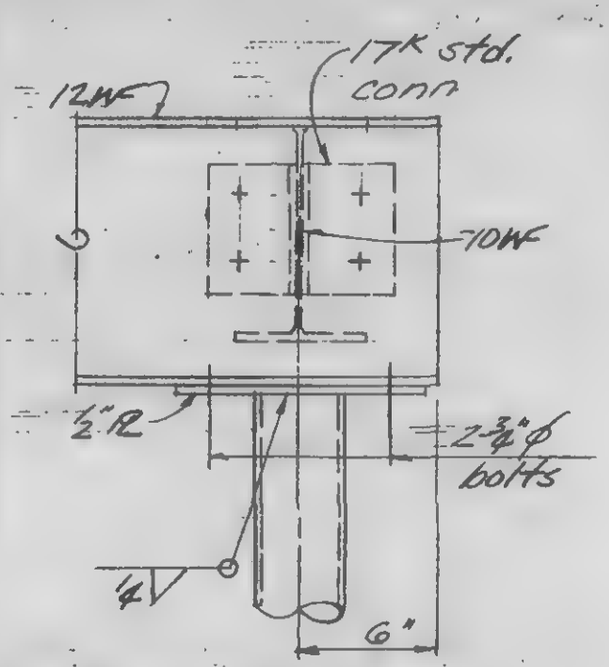

Detail 21-2K

LICENSED PROFESSIONAL ENGINEER — LESLIE E. ROBERTSON — No. 34360 — UNIVERSITY OF THE STATE OF NEW YORK

DESIGNED

DRAWN J. Adams

REVIEWED W. Brewer

9-AB21-2H

SKILLING, HELLE, CHRISTIANSEN, ROBERTSON — Structural & Civil Engineers

PROJECT: THE WORLD TRADE CENTER | TITLE: FL. 107-PH CONNECTION DETAILS - POSTS & MISC. | DATE: 4-1-70

REVISIONS

5/27/70

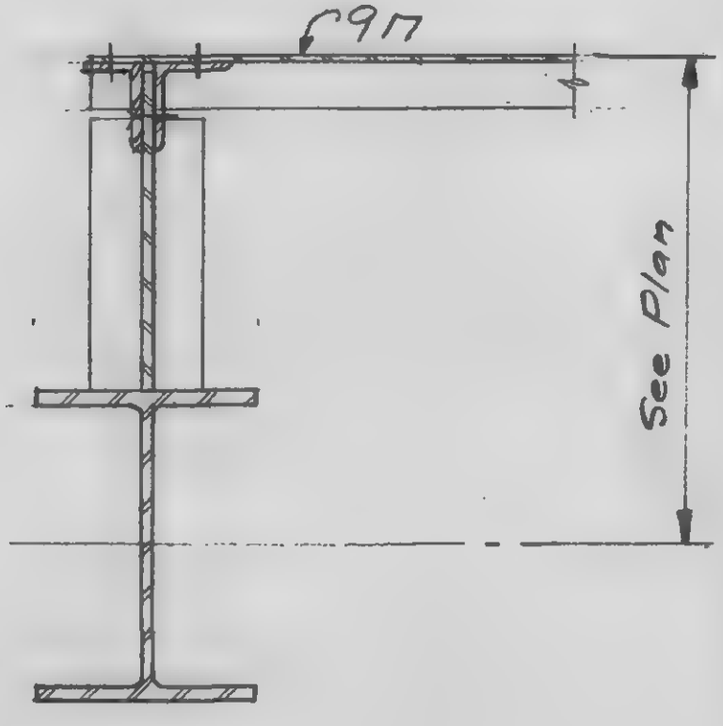

Section a-a

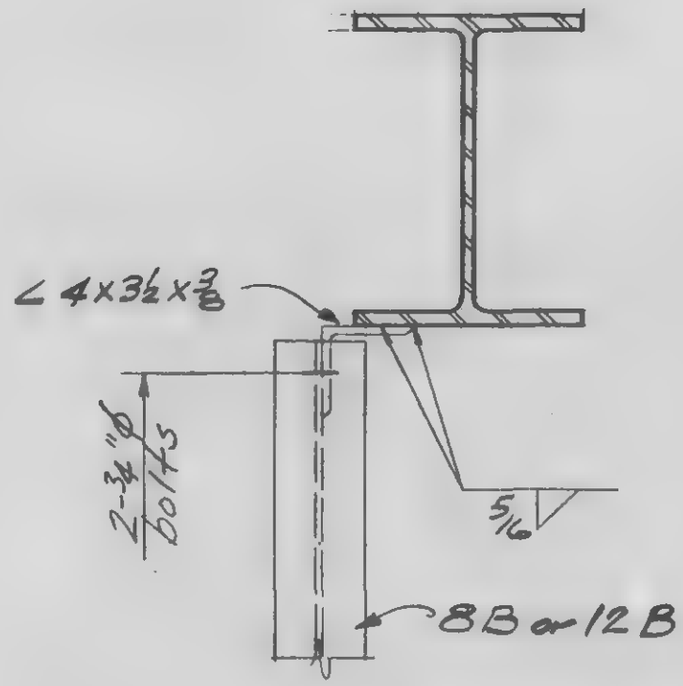

Detail Z1-3B

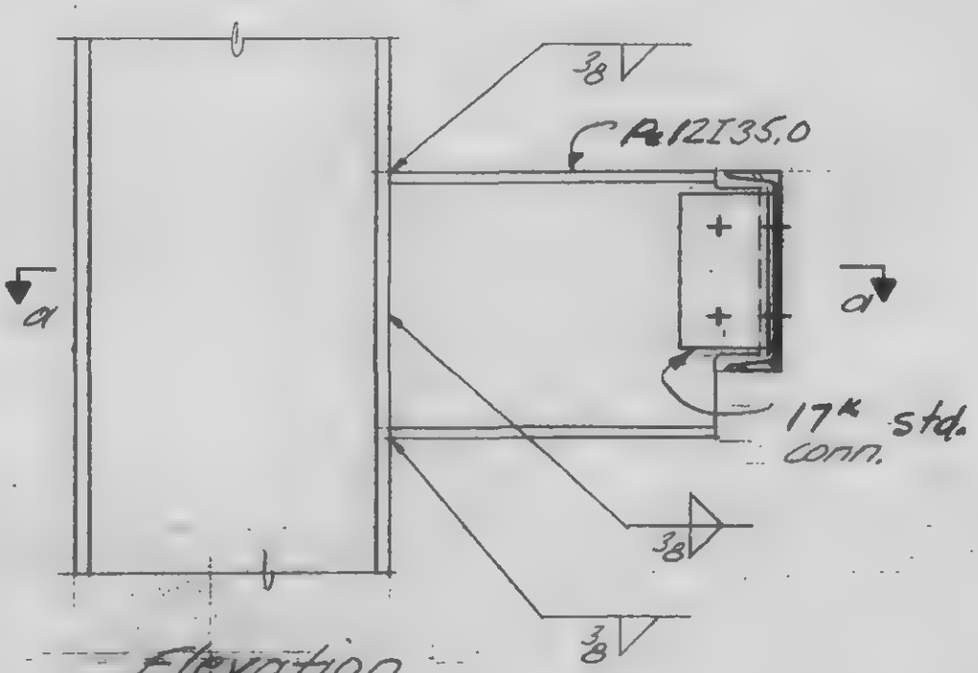

Elevation

Detail Z1-3A

LICENSED PROFESSIONAL ENGINEER
LESLIE E. ROBERTSON
No. 34360
UNIVERSITY OF THE STATE OF NEW YORK

DESIGNED

DRAWN
J. Adams

REVIEWED
W. Brewer

9-AB21-3.1

SKILLING, HELLE, CHRISTIANSEN, ROBERTSON — Structural & Civil Engineers

PROJECT THE WORLD TRADE CENTER | TITLE FL. 107: PH CONNECTION DETAILS - POSTS & MISC | DATE 4-1-70

REVISIONS
5/27/70

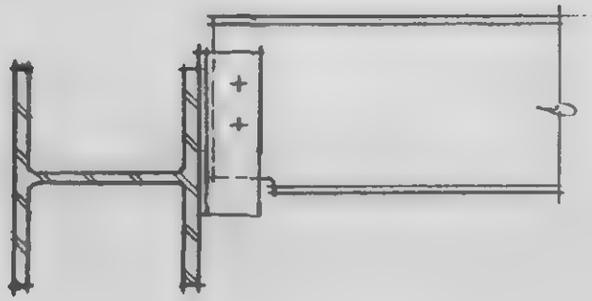

Section a-a

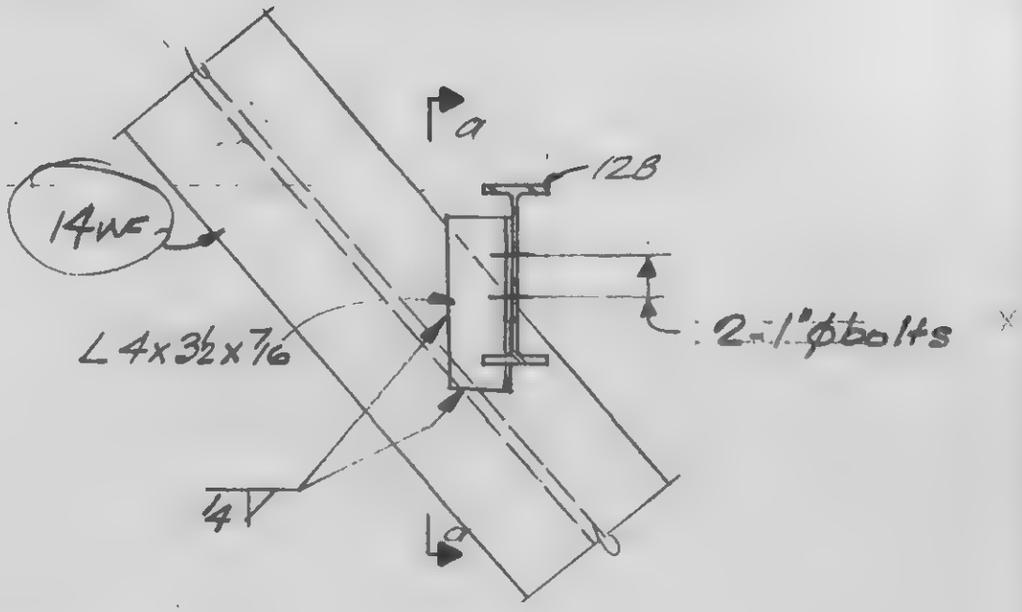

Detail 21-3C

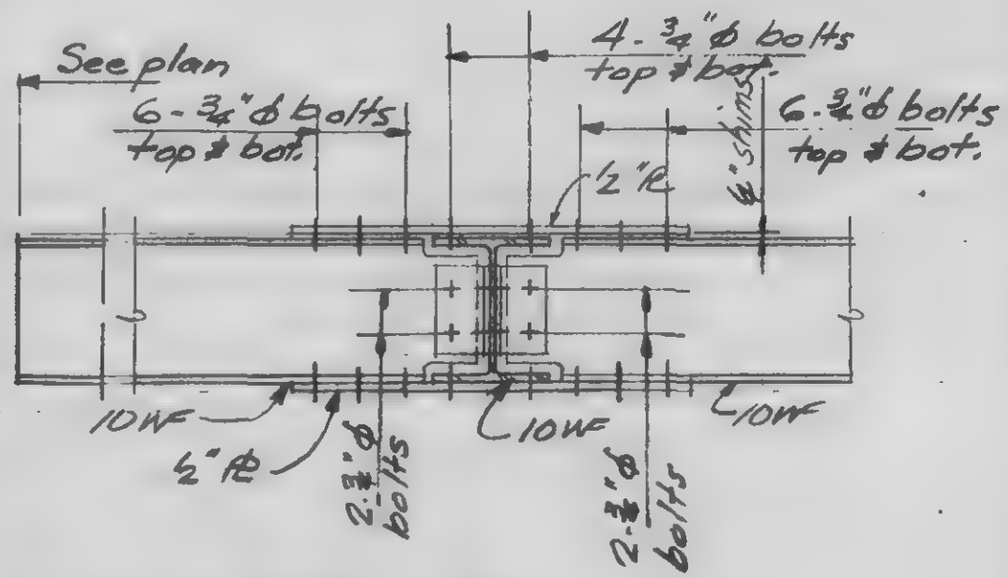

Detail 21-3E

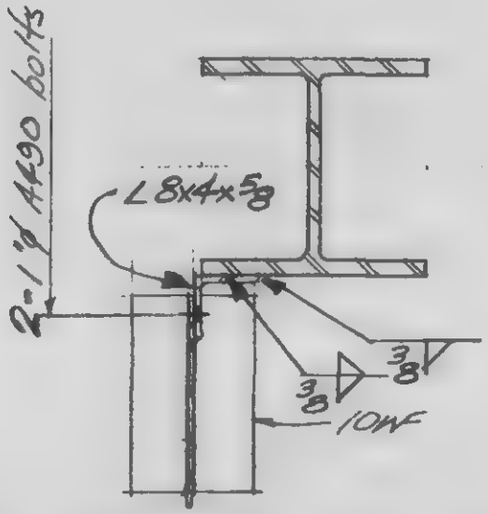

Detail 21-3F

LICENSED PROFESSIONAL ENGINEER
LESLIE E. ROBERTSON
No. 24360
UNIVERSITY OF THE STATE OF NEW YORK

DESIGNED

DRAWN
J. Adams

REVIEWED
W. Brewer

9-AB21-3.2

SKILLING, HELLE, CHRISTIANSEN, ROBERTSON — Structural & Civil Engineers

PROJECT THE WORLD TRADE CENTER | TITLE FL.107-PH, CONNECTION DETAILS - POSTS & MISC | DATE 6-15-70

REVISIONS

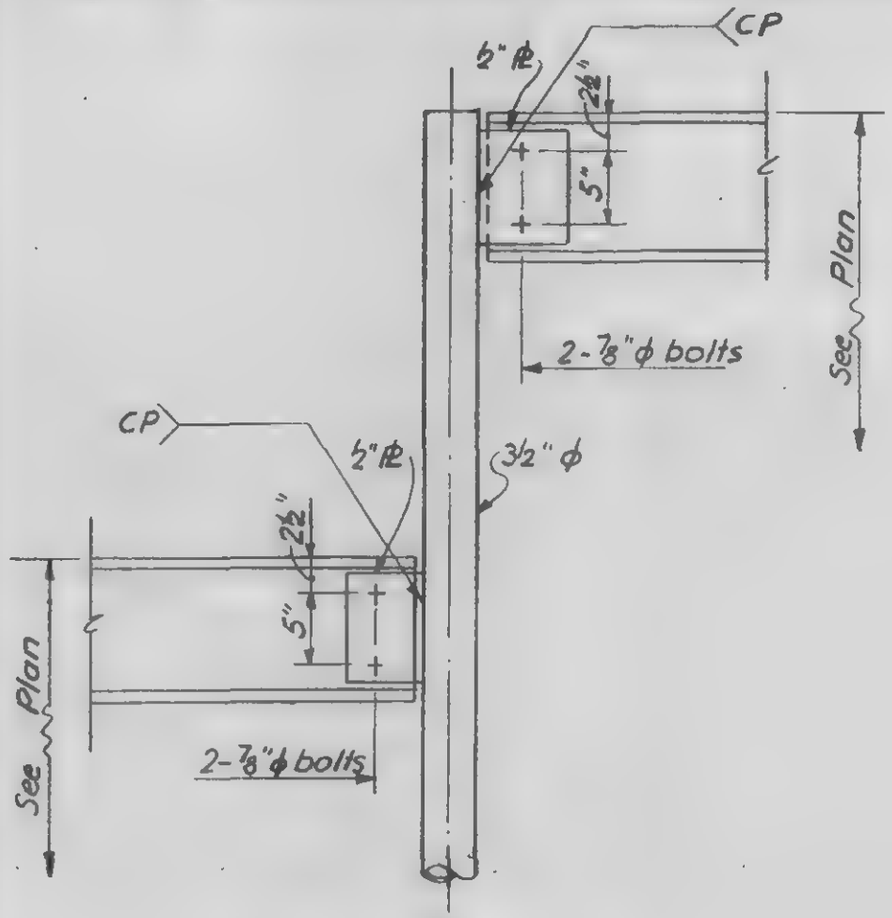

Detail 21-4B

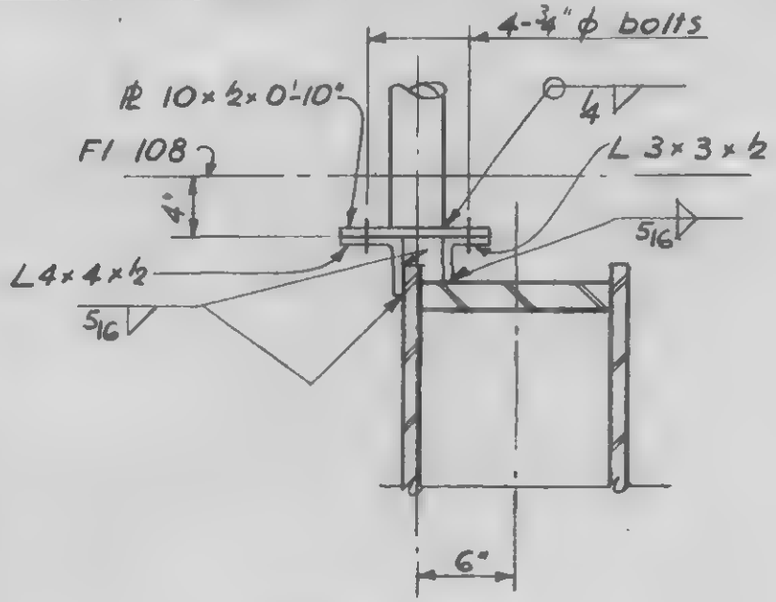

Detail 21-4A

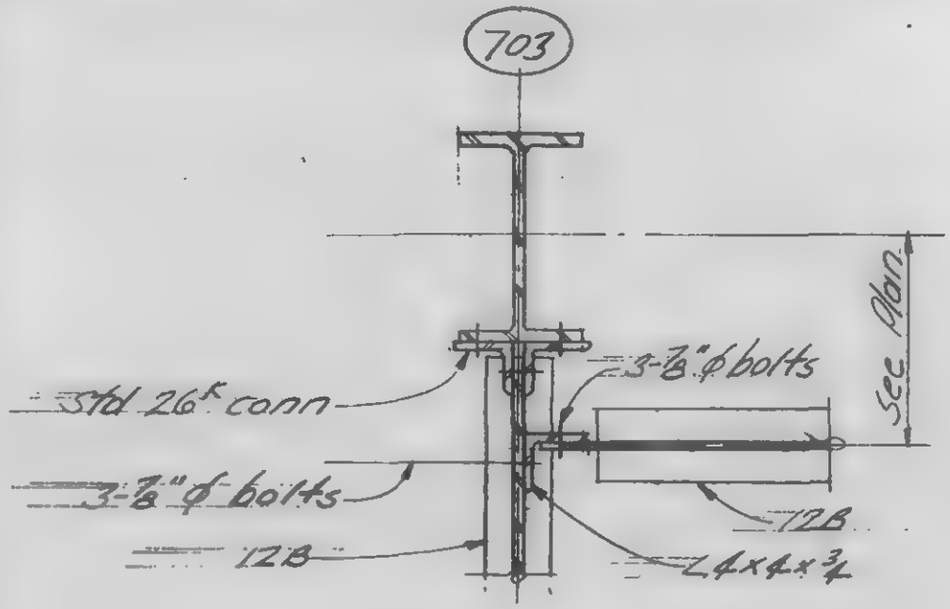

Detail 21-4C

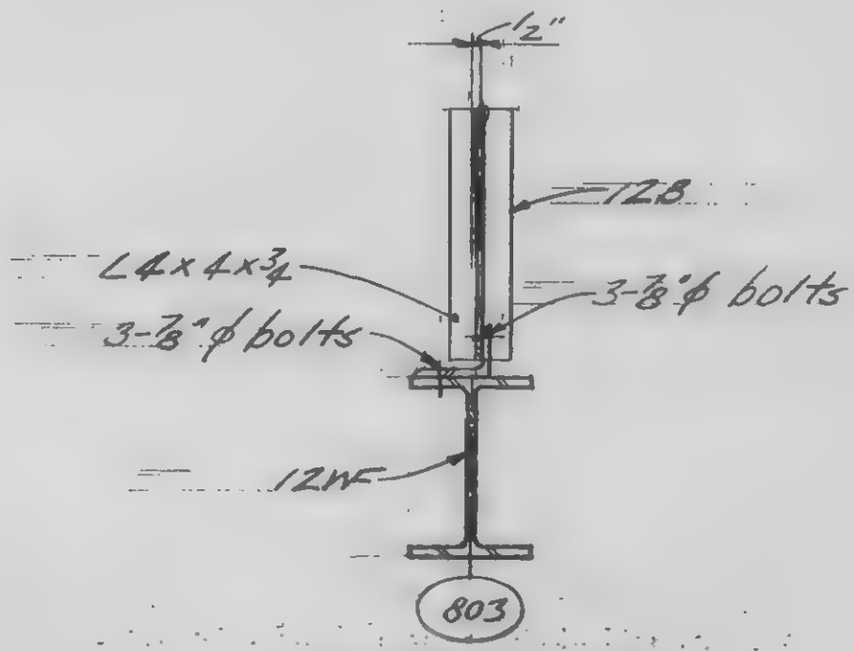

Detail 21-4D

LICENSED PROFESSIONAL ENGINEER LESLIE E. ROBERTSON NO. 34360 UNIVERSITY OF THE STATE OF NEW YORK

DESIGNED

DRAWN F. Smith

REVIEWED

9-AB 21-4

SKILLING, HELLE, CHRISTIANSEN, ROBERTSON — Structural & Civil Engineers

PROJECT: THE WORLD TRADE CENTER | TITLE: FL 107-PH CONNECTION DETAIL - FL 109 | DATE: 4-1-70

REVISIONS

6-15-70

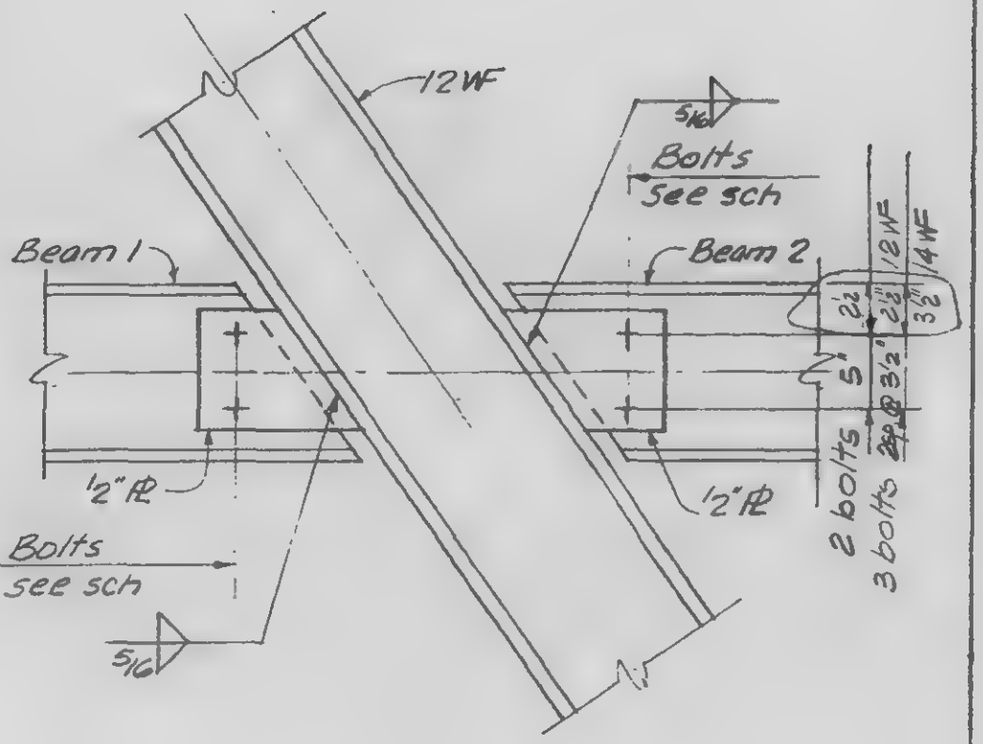

Detail	Beam 1	Bolts	Beam 2	Bolts
22-1A	10WF	2-7/8"ϕ	10WF	2-7/8"ϕ
22-1B	14WF	3-7/8"ϕ	14WF	3-7/8"ϕ
22-1C	12WF	3-7/8"ϕ	12WF	3-7/8"ϕ
22-1D	12WF	3-7/8"ϕ	14WF	3-7/8"ϕ

Detail 22-1A, B, C, D

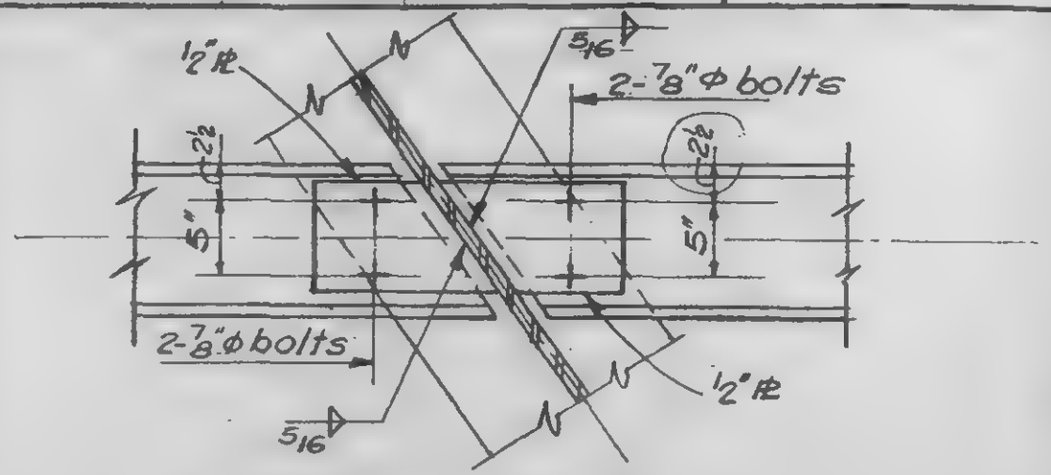

Detail 22-1E

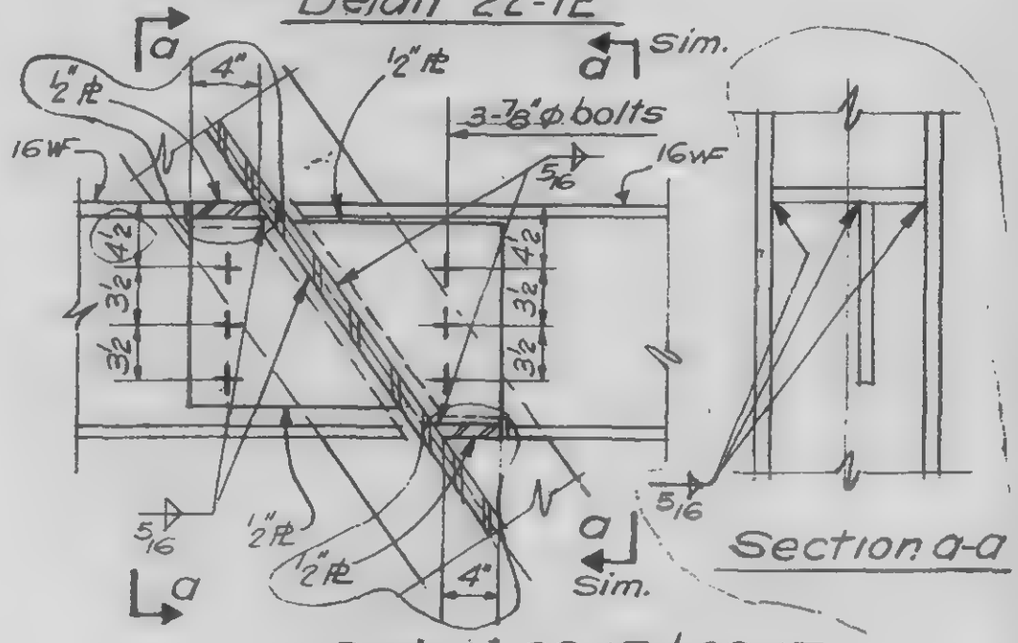

Detail 22-1E & 22-1F

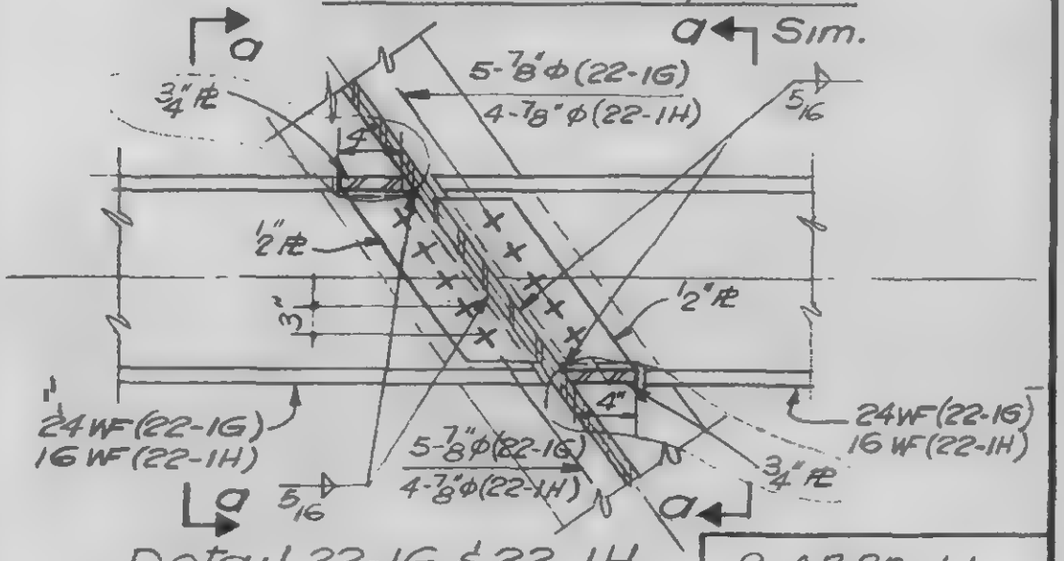

Detail 22-1G & 22-1H

9-AB22-1.1

LICENSED PROFESSIONAL ENGINEER — LESLIE E. ROBERTSON — No. 34360 — UNIVERSITY OF THE STATE OF NEW YORK

DESIGNED

DRAWN V.H.A

REVIEWED ✓

SKILLING, HELLE, CHRISTIANSEN, ROBERTSON — Structural & Civil Engineers

PROJECT: THE WORLD TRADE CENTER | TITLE: FL.107-PH CONNECTION DETAIL - FL.109 | DATE: 4-1-70

REVISIONS

6-15-70

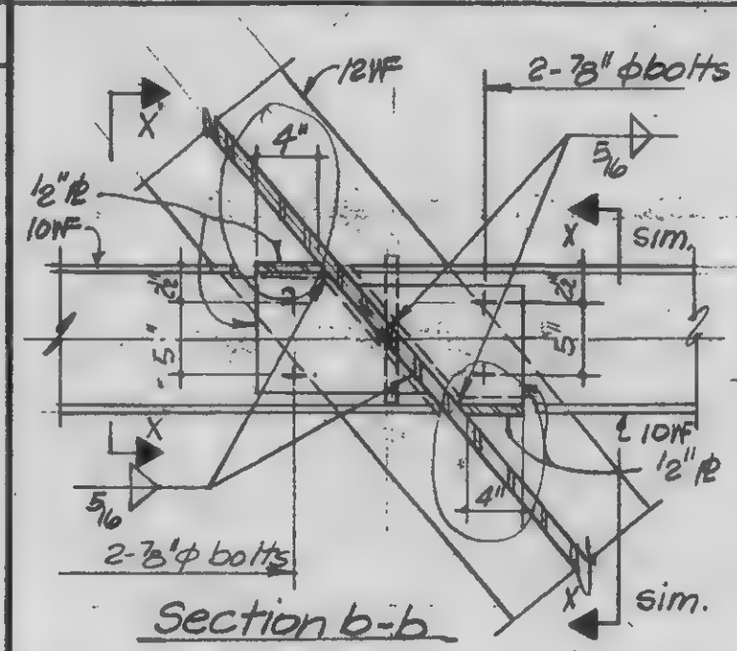

Section b-b

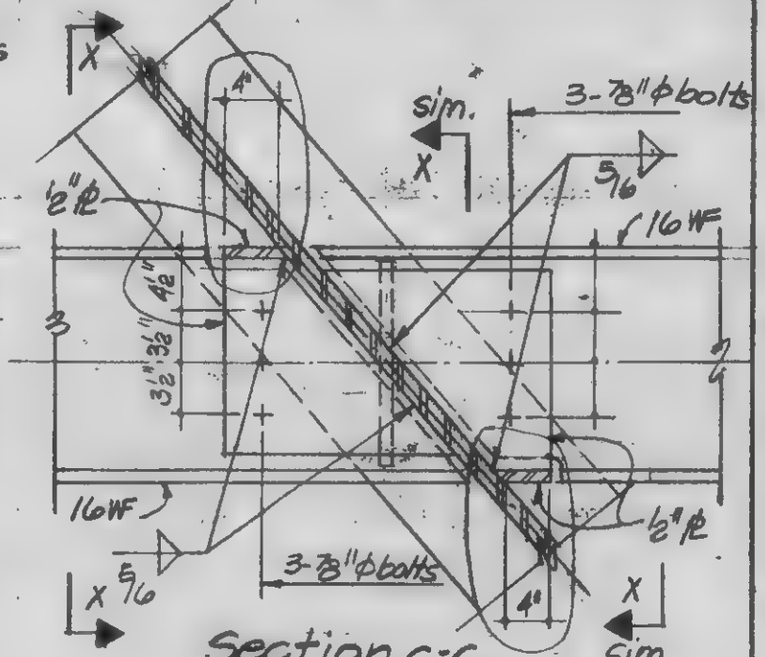

Section c-c

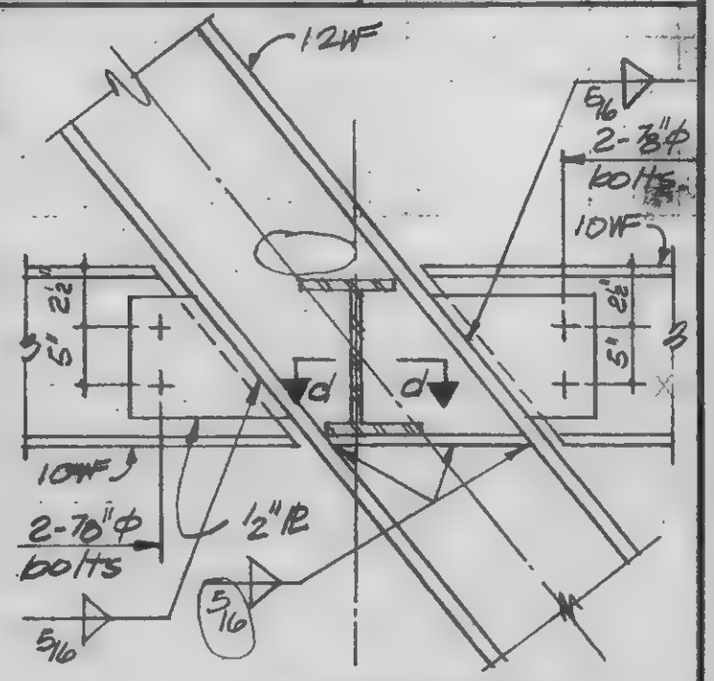

Detail 22-1N

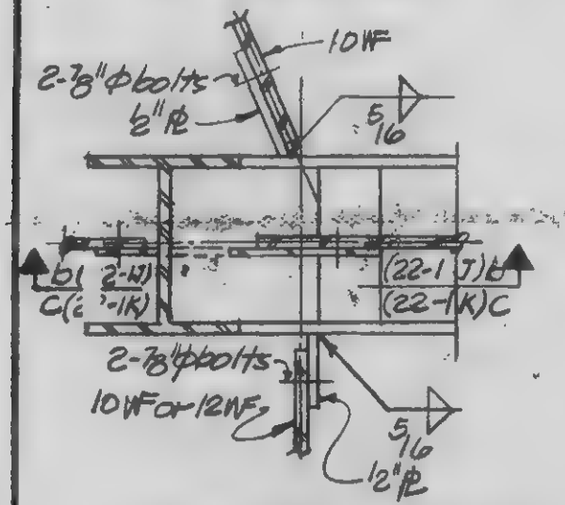

Plan 22-1J & 22-1K

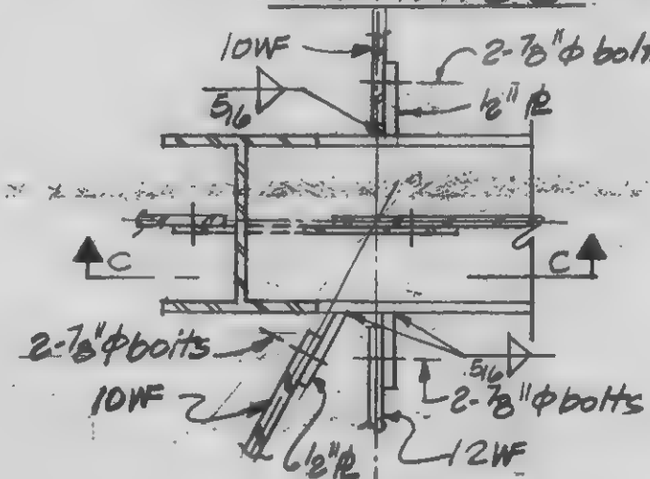

Plan 22-1L

Detail 22-1P

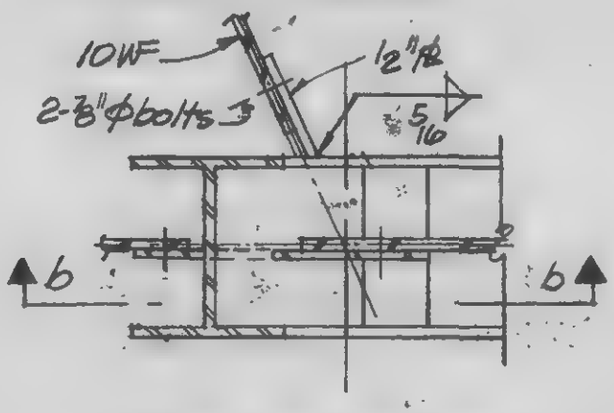

Plan 22-1M

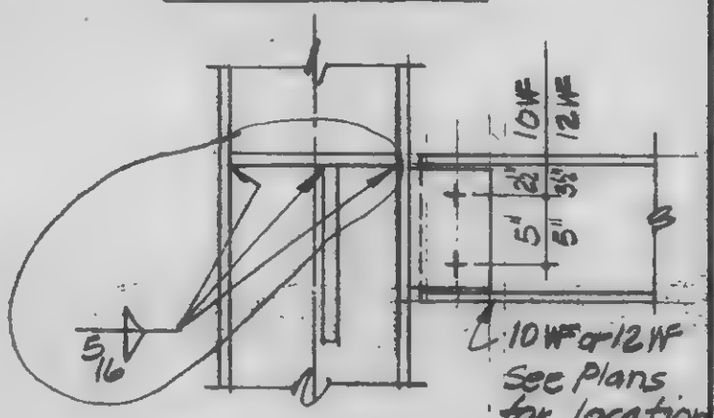

Section x-x

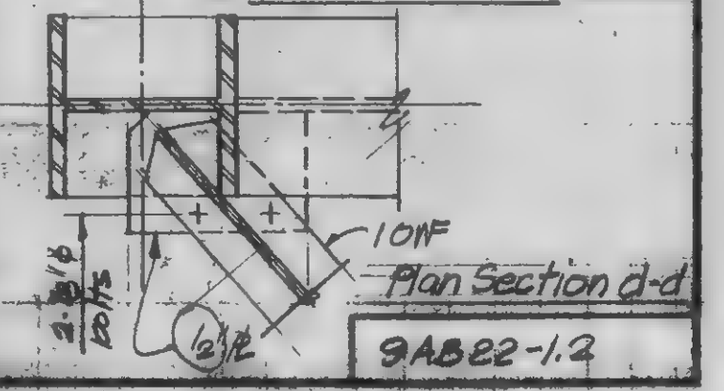

Plan Section d-d

LICENSED PROFESSIONAL ENGINEER — LESLIE E. ROBERTSON — No. 34960 — UNIVERSITY OF THE STATE OF NEW YORK

DESIGNED

DRAWN P. Ozeki

REVIEWED

9AB22-1.2

SKILLING, HELLE, CHRISTIANSEN, ROBERTSON — Structural & Civil Engineers

PROJECT THE WORLD TRADE CENTER | TITLE FL. 107-PH CONNECTION DETAILS - FL. 109 | DATE 4-1-70

REVISIONS

6-15-70

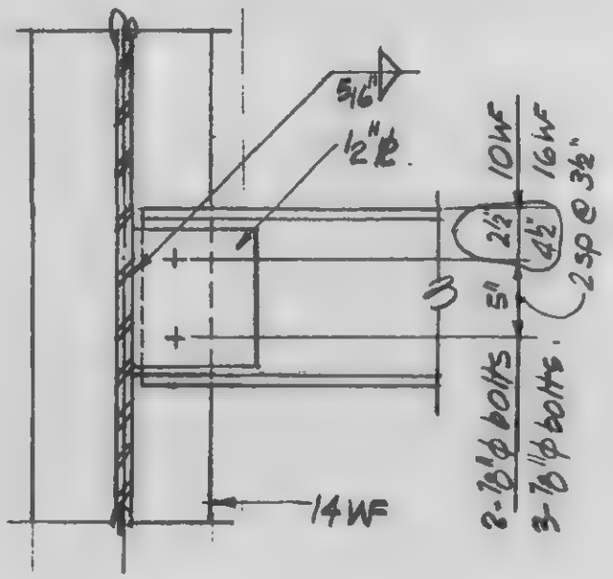

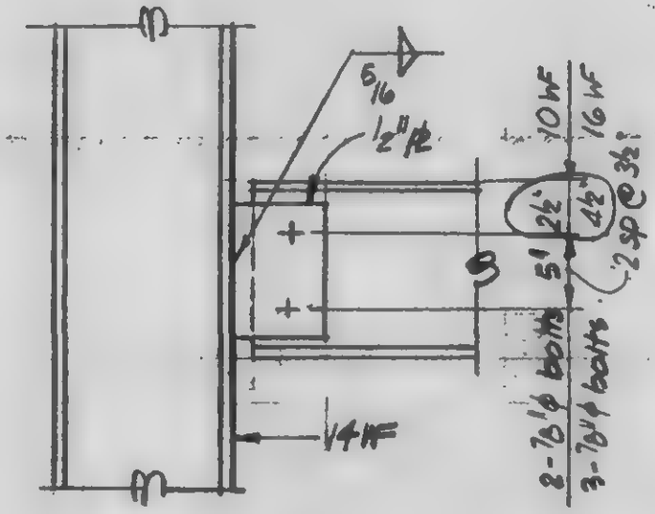

Detail 22-2A,B,C,E,F

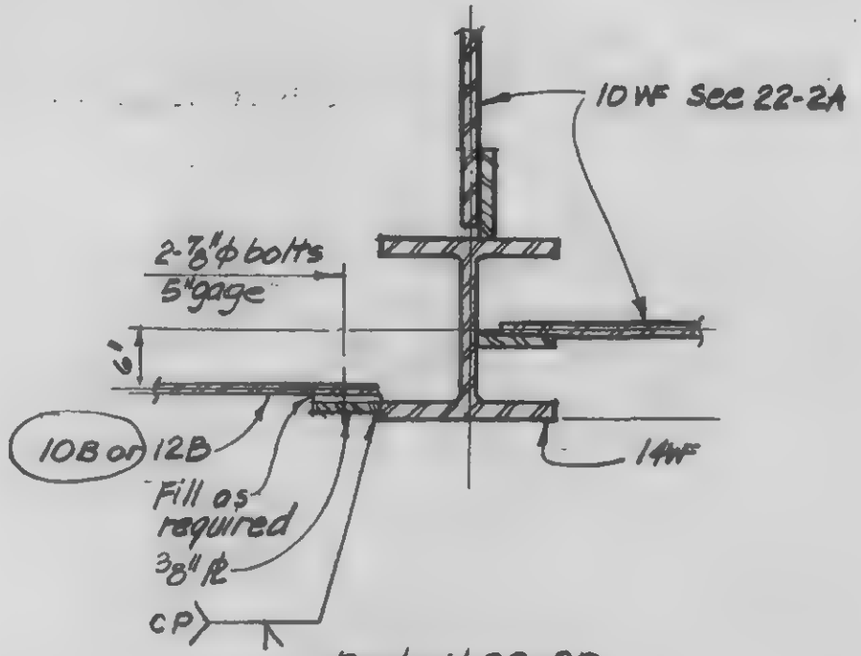

Detail 22-2D

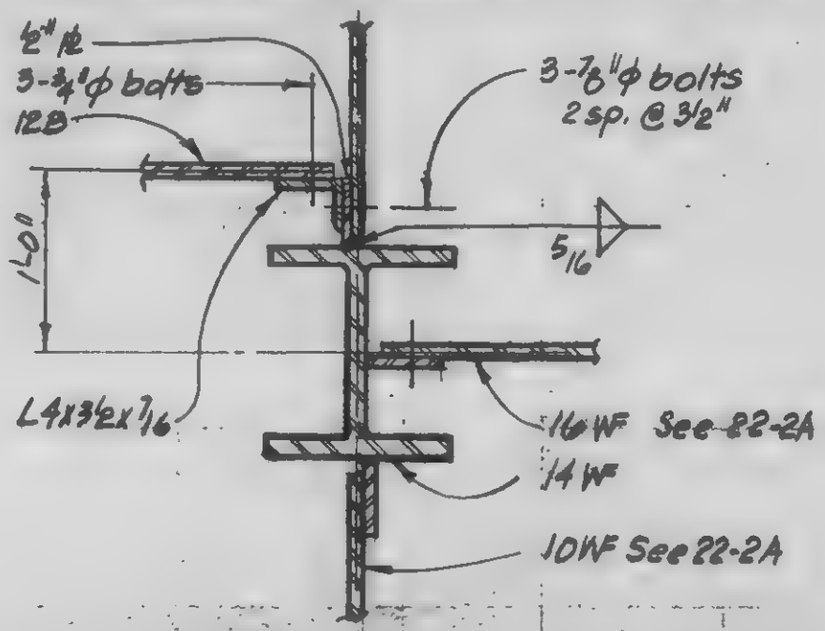

Detail 22-2G

LICENSED PROFESSIONAL ENGINEER
LESLIE E. ROBERTSON
No 34360
UNIVERSITY OF THE STATE OF NEW YORK

DESIGNED

DRAWN P.M. Ozeki

REVIEWED

9-AB22-2

SKILLING, HELLE, CHRISTIANSEN, ROBERTSON · Structural & Civil Engineers

PROJECT THE WORLD TRADE CENTER | TITLE FL. 107 - PH. CONNECTION DETAILS - FL. 109 | DATE 4-1-70

REVISIONS

6-15-70

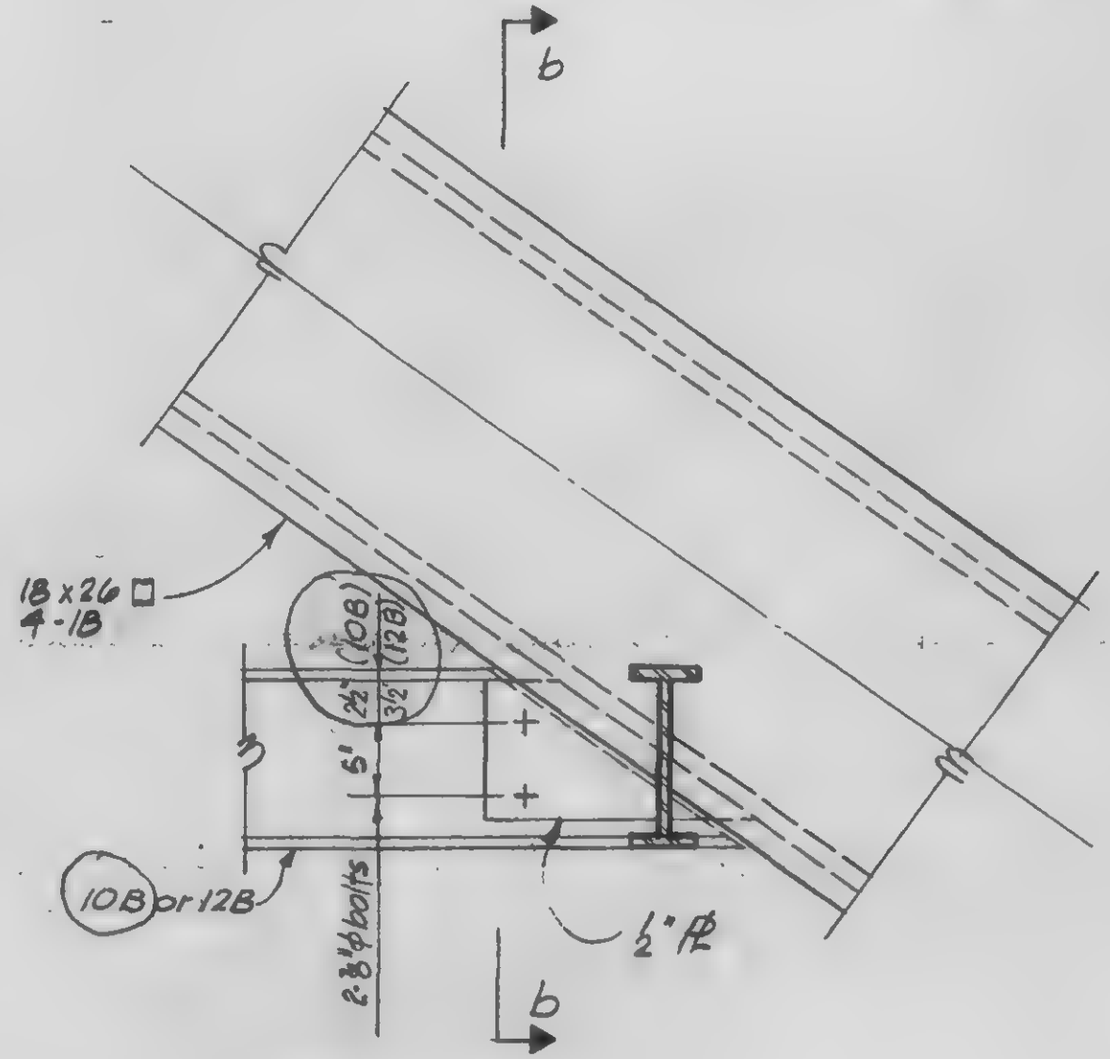

Section a-a

Detail 22-3A

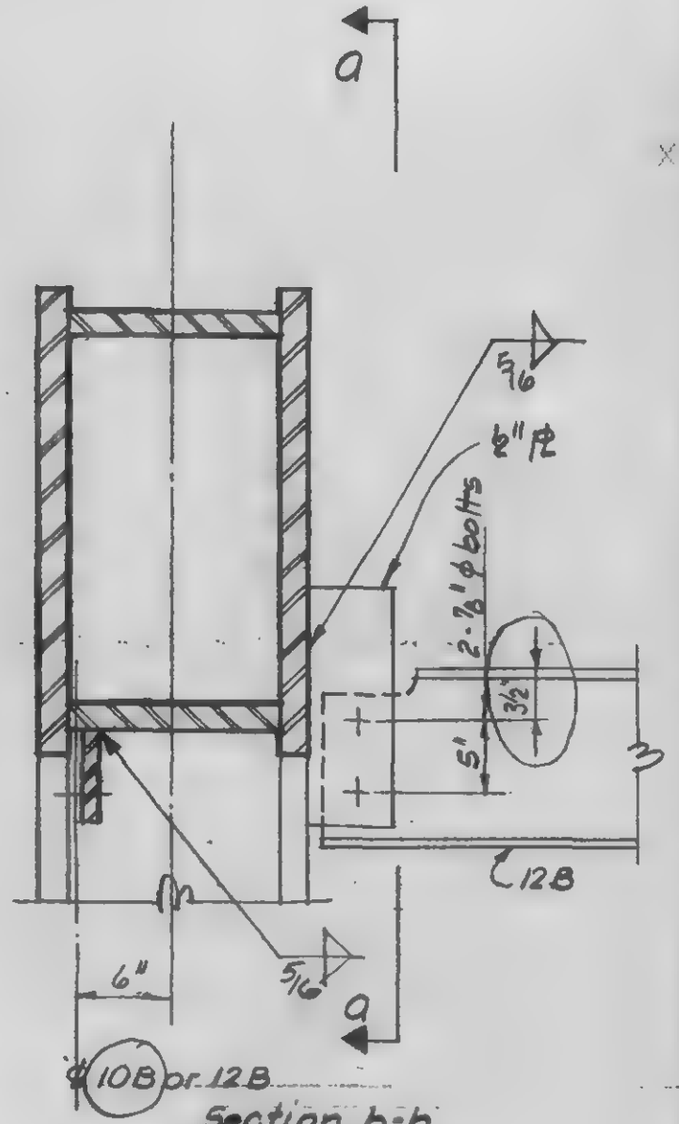

Section b-b

Detail 22-3B

LICENSED PROFESSIONAL ENGINEER
LESLIE E. ROBERTSON
No. 34340
UNIVERSITY OF THE STATE OF NEW YORK

DESIGNED

DRAWN
P.M. Ozeki

REVIEWED

9-AB 22-3

SKILLING, HELLE, CHRISTIANSEN, ROBERTSON — Structural & Civil Engineers

PROJECT: THE WORLD TRADE CENTER | TITLE: FL 107-PH CONNECTION DETAILS-FL.109 | DATE: 4-1-70

REVISIONS

6-15-70

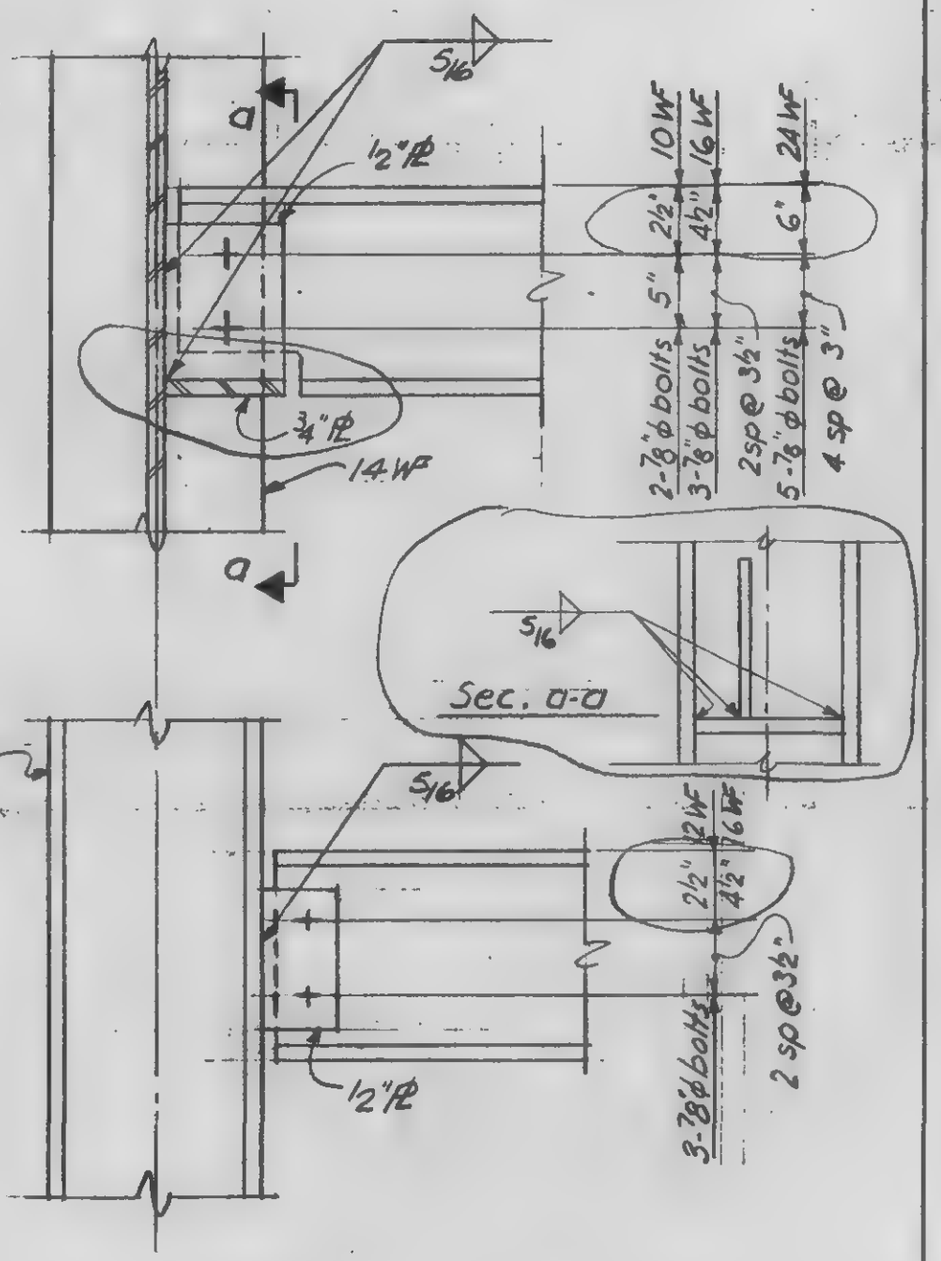

Detail 22-4A, B, C, D, E, F, G, J

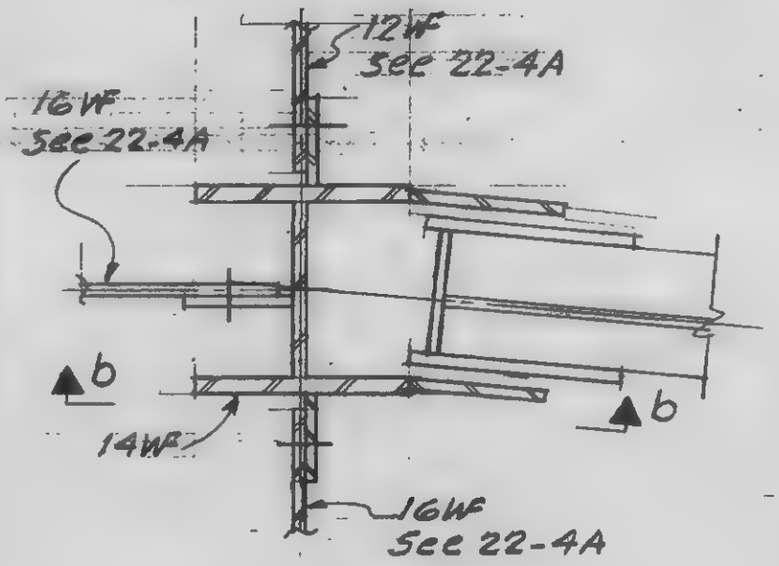

Plan

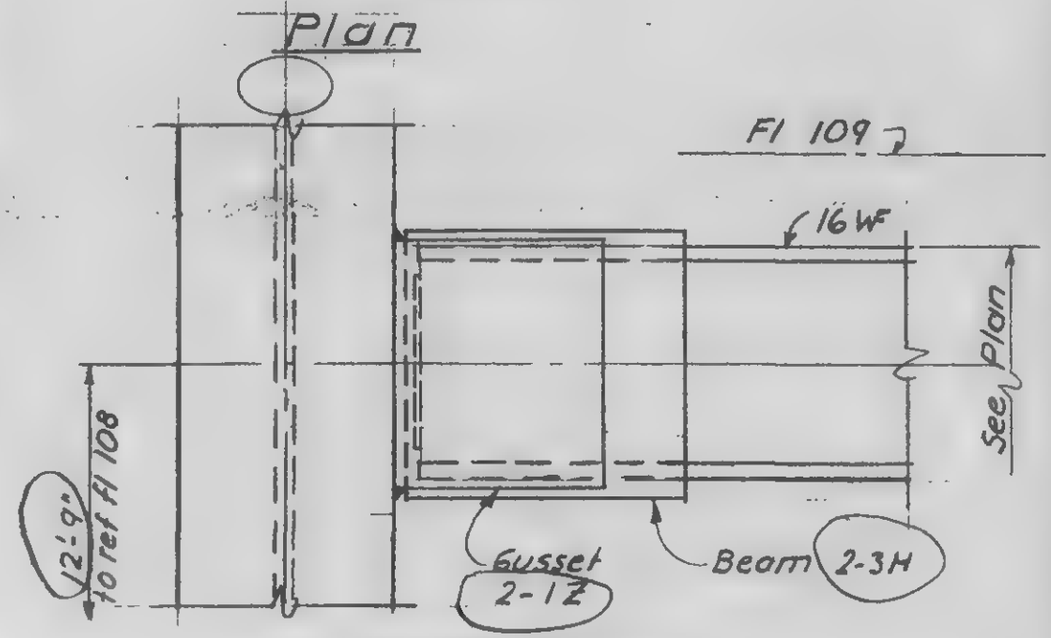

Section b-b

Detail 22-4H

LICENSED PROFESSIONAL ENGINEER — LESLIE E. ROBERTSON — No. 34360 — UNIVERSITY OF THE STATE OF NEW YORK

DESIGNED

DRAWN AF

REVIEWED

9-AB22-4.1

SKILLING, HELLE, CHRISTIANSEN, ROBERTSON — Structural & Civil Engineers

PROJECT: THE WORLD TRADE CENTER | TITLE: FL 107-PH CONNECTION DETAILS- FL. 109 | DATE: 4-1-70

REVISIONS

6-15-70

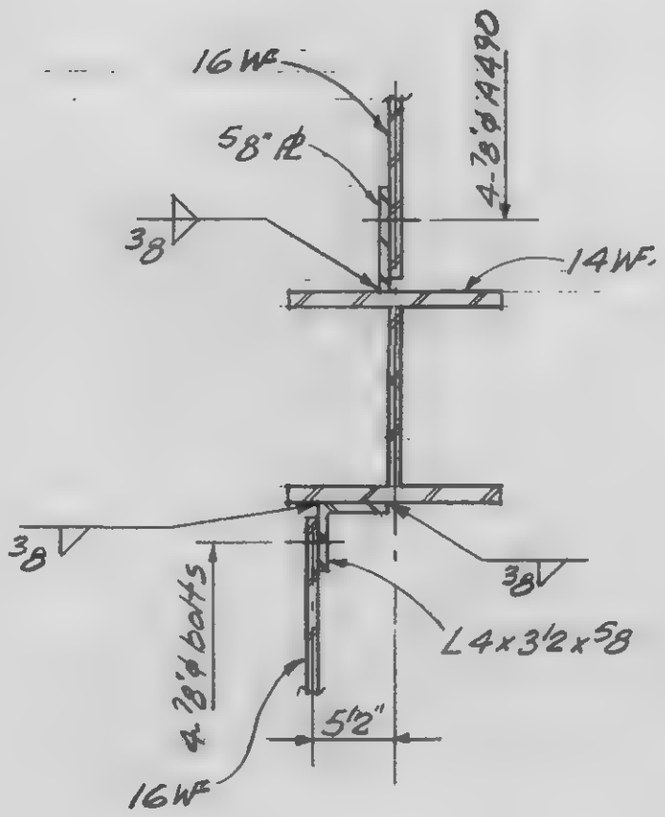

Detail 22-4K

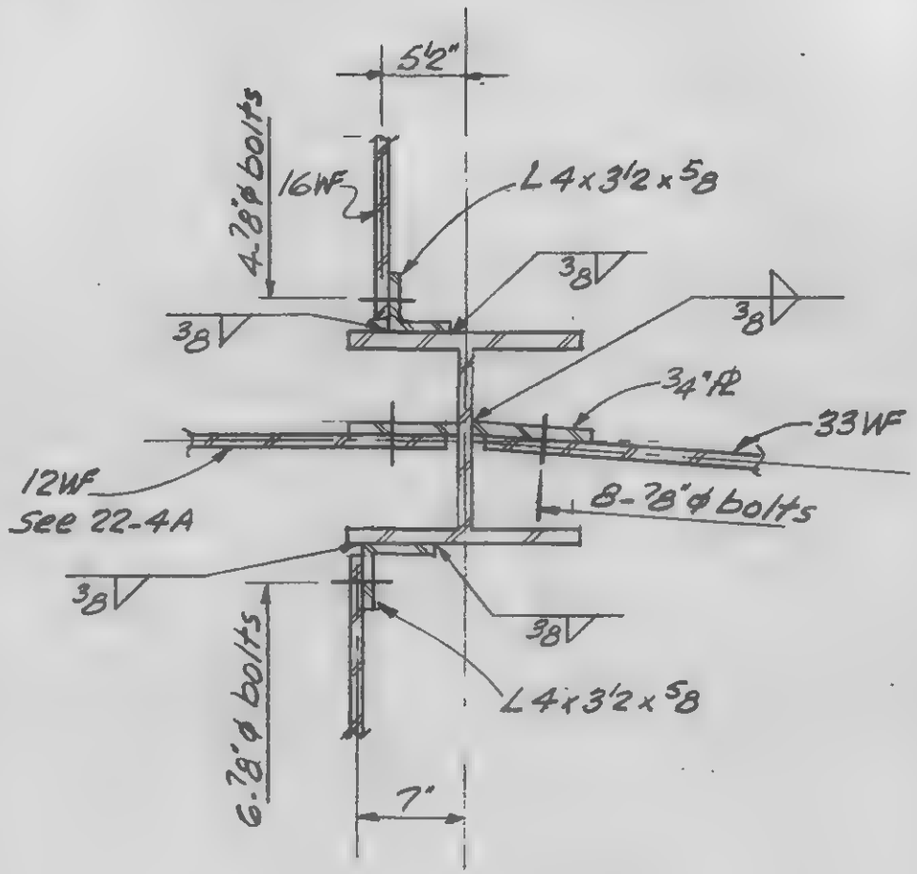

Detail 22-4M

LICENSED PROFESSIONAL ENGINEER
LESLIE E. ROBERTSON
No 34360
UNIVERSITY OF THE STATE OF NEW YORK

DESIGNED

DRAWN
AF

REVIEWED

9-AB22-4.2

SKILLING, HELLE, CHRISTIANSEN, ROBERTSON — Structural & Civil Engineers

PROJECT THE WORLD TRADE CENTER | TITLE FL107-PH CONNECTION DETAILS-FL.109 | DATE 6-15-70

REVISIONS

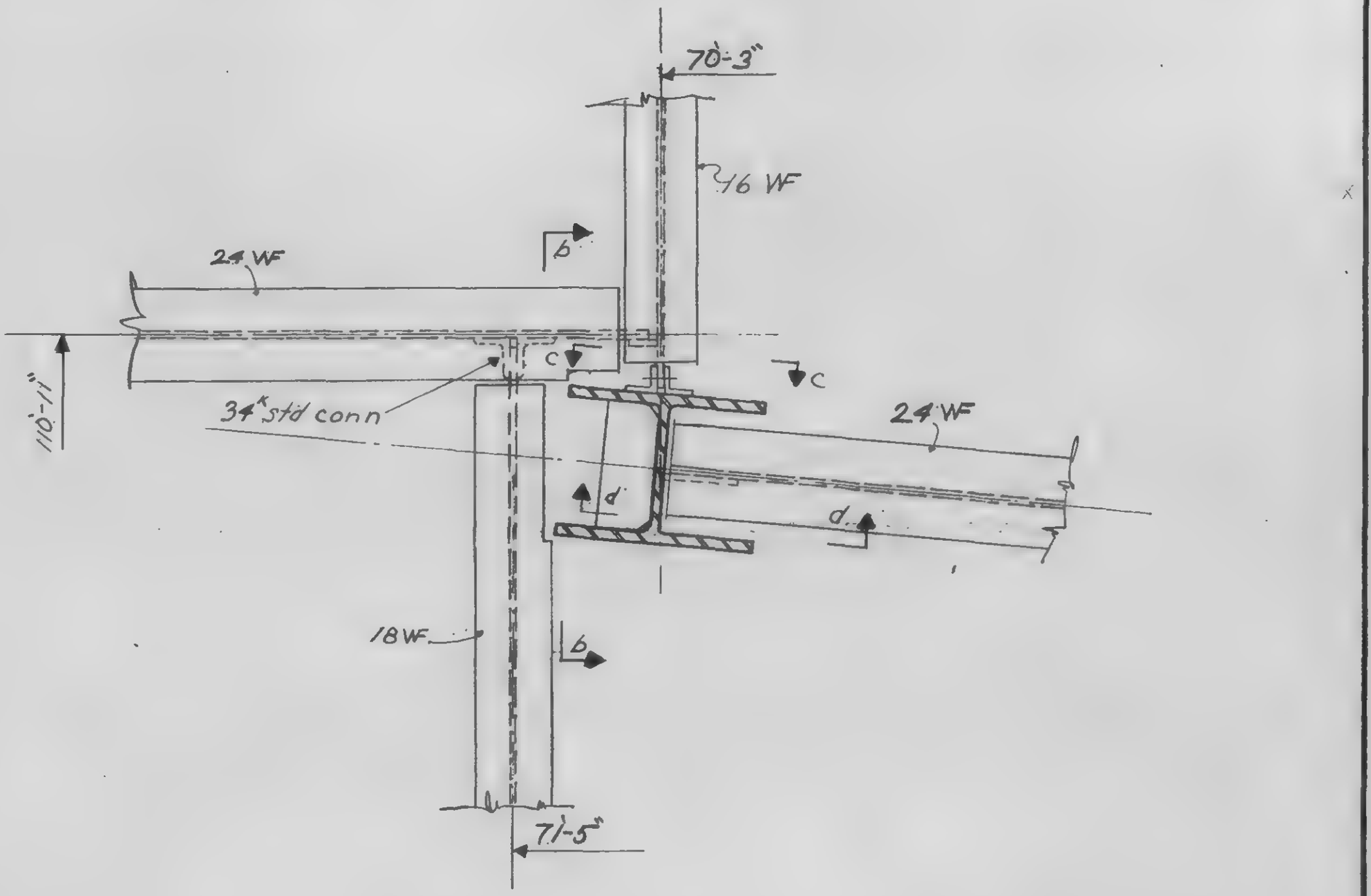

Plan

Detail 22-5A

LICENSED PROFESSIONAL ENGINEER
LESLIE E. ROBERTSON
No. 34960
UNIVERSITY OF THE STATE OF NEW YORK

DESIGNED

DRAWN

REVIEWED

19-A822-5.1

SKILLING, HELLE, CHRISTIANSEN, ROBERTSON — Structural & Civil Engineers

PROJECT: THE WORLD TRADE CENTER | TITLE: FL. 107-PH CONNECTION DETAILS - FL 109 | DATE: 6-15-70

REVISIONS

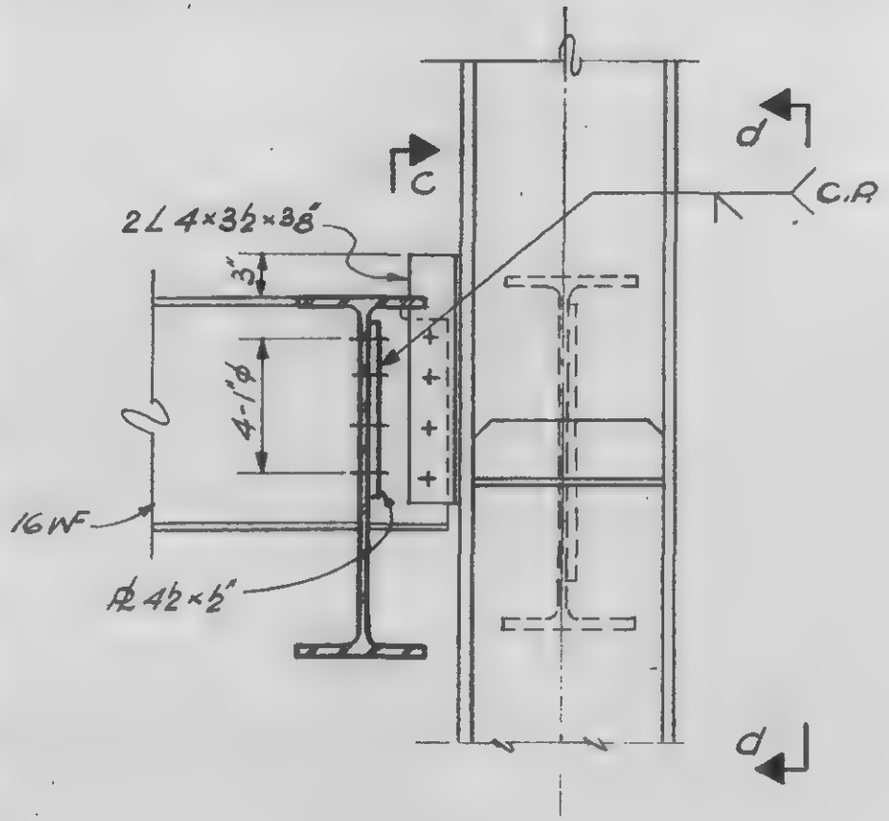

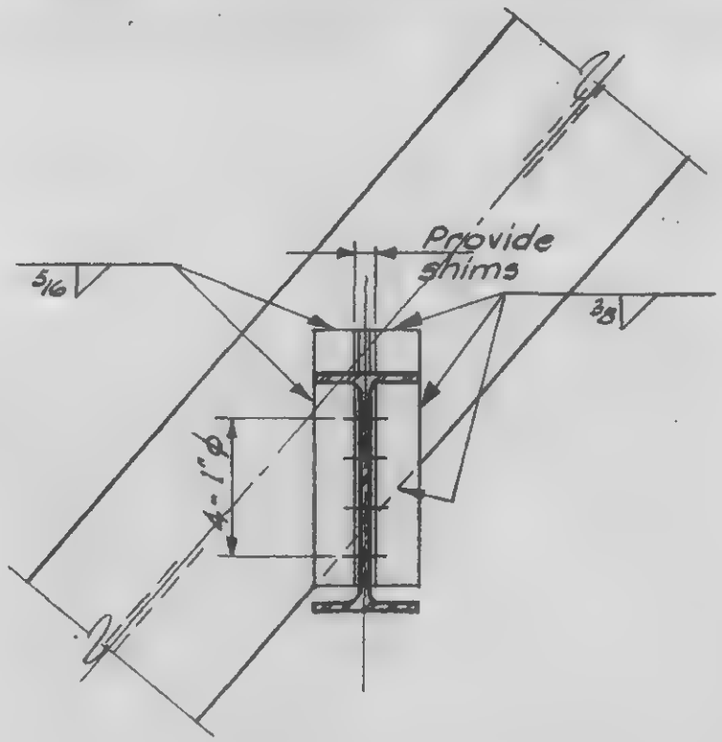

Section c-c

c

Section b-b

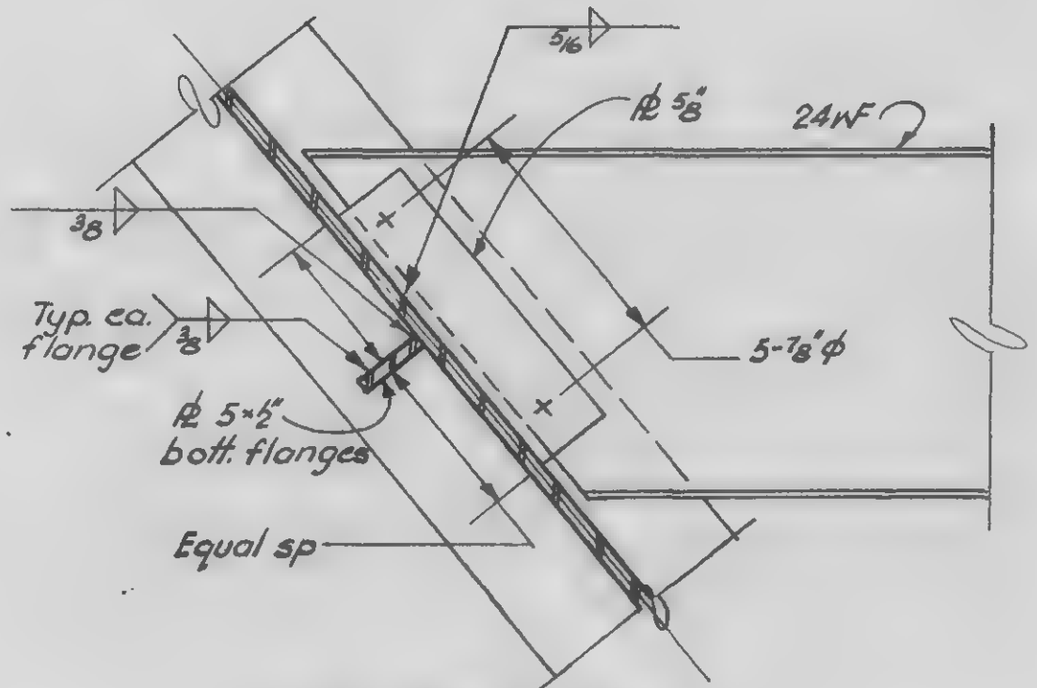

Section d-d

LICENSED PROFESSIONAL ENGINEER — LESLIE E. ROBERTSON — No. 34360 — UNIVERSITY OF THE STATE OF NEW YORK

DESIGNED

DRAWN: D. Huggins

REVIEWED

9-AB22-5.2

SKILLING, HELLE, CHRISTIANSEN, ROBERTSON — Structural & Civil Engineers

PROJECT: THE WORLD TRADE CENTER | TITLE: FL 107-PH CONNECTION DETAIL - FL 109 | DATE: 6-15-70

REVISIONS

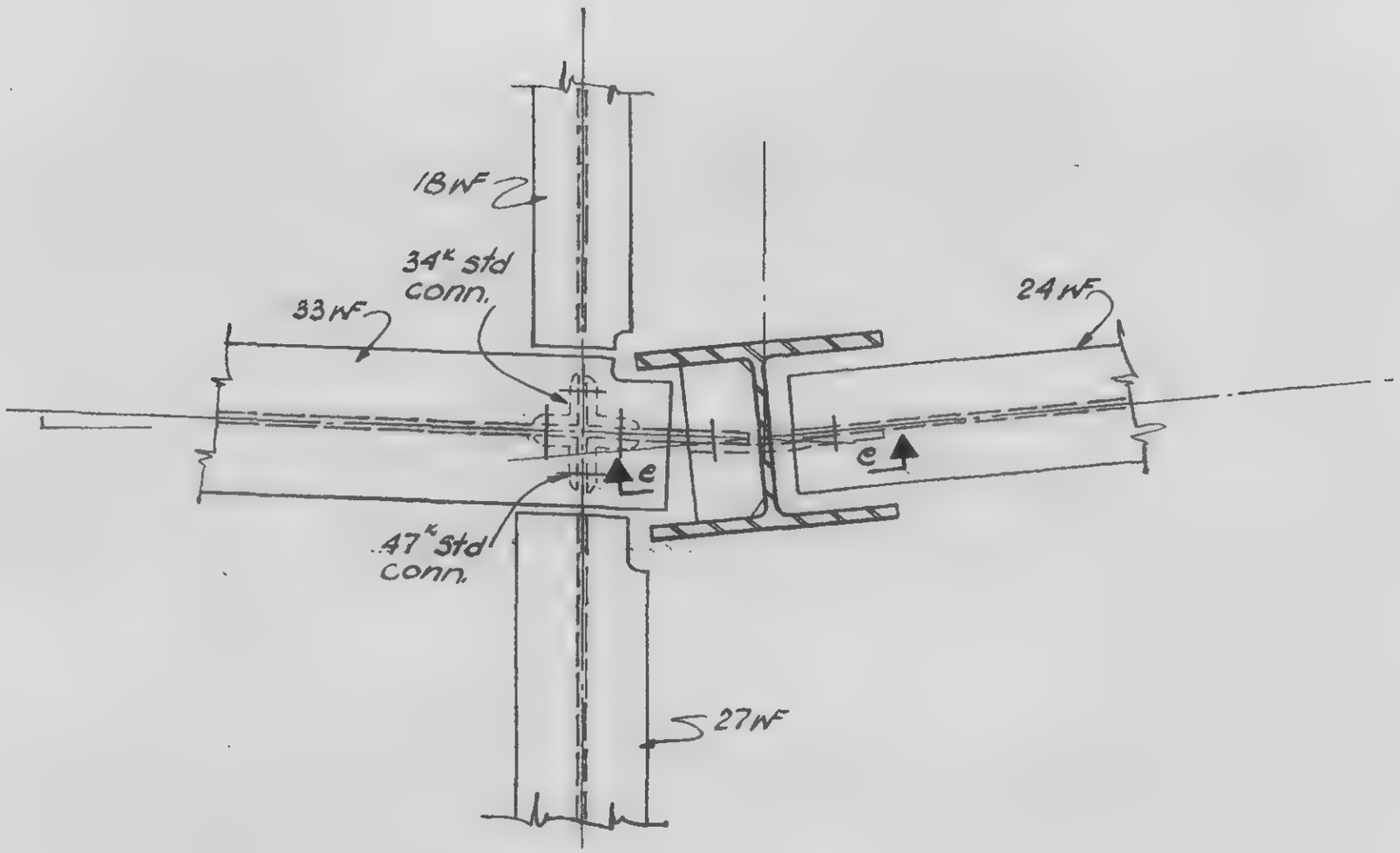

DETAIL 22-5B

LICENSED PROFESSIONAL ENGINEER
LESLIE E. ROBERTSON
No. 34360
UNIVERSITY OF THE STATE OF NEW YORK

DESIGNED

DRAWN

REVIEWED

9-AB22-5.3

SKILLING, HELLE, CHRISTIANSEN, ROBERTSON — Structural & Civil Engineers

PROJECT: THE WORLD TRADE CENTER | TITLE: FL.107-PH CONNECTION DETAIL - FL.109 | DATE: 6-15-70

REVISIONS

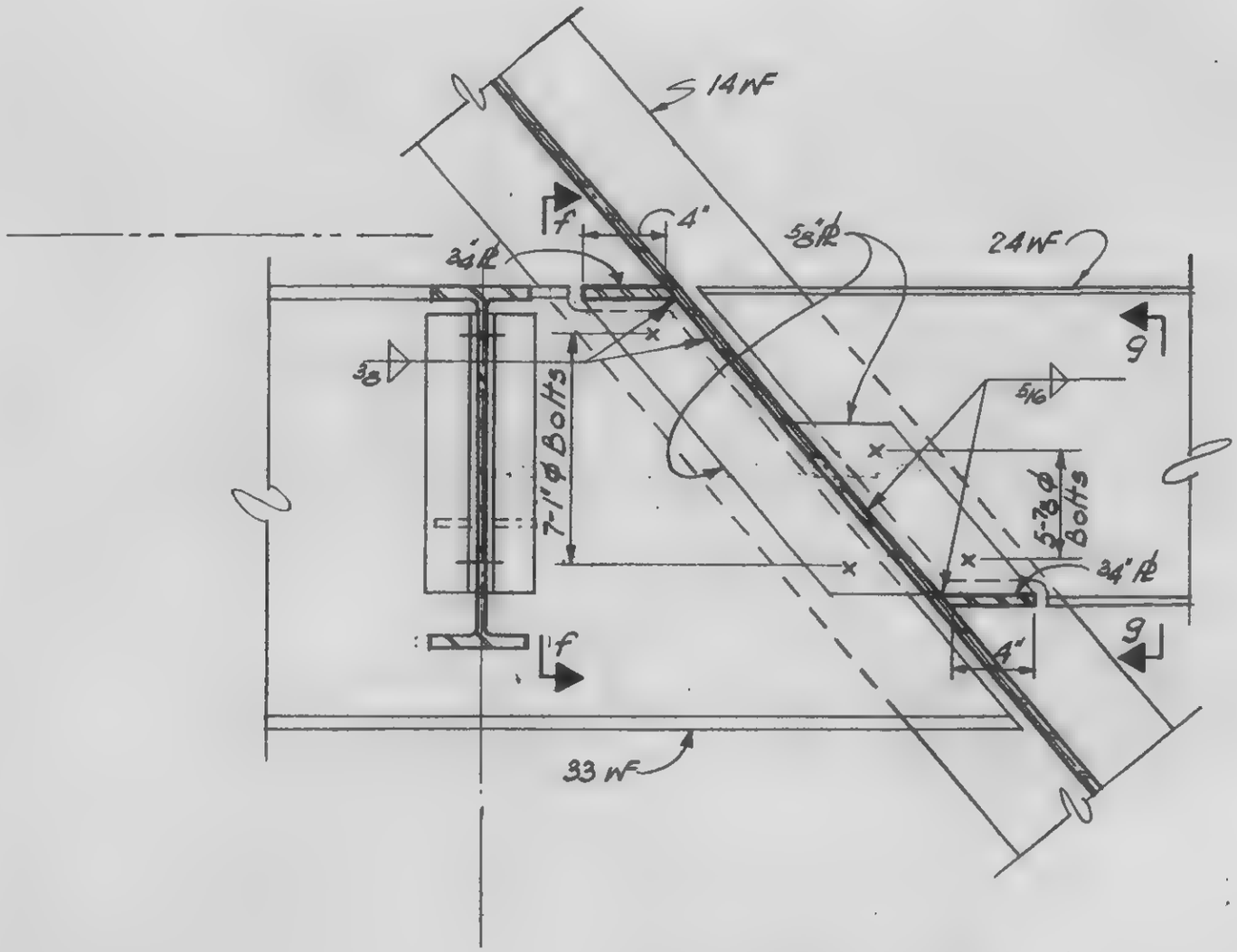

Section e-e

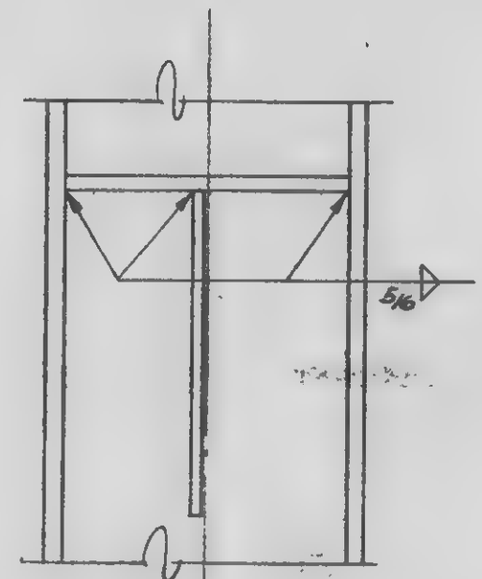

Section f-f

Section g-g (sim)

LICENSED PROFESSIONAL ENGINEER — LESLIE E. ROBERTSON — No. 34860 — UNIVERSITY OF THE STATE OF NEW YORK

DESIGNED

DRAWN: D. Huggins

REVIEWED

9-A822-5.4

SKILLING, HELLE, CHRISTIANSEN ROBERTSON — Structural & Civil Engineers

PROJECT: THE WORLD TRADE CENTER | TITLE: FLOOR TO COLUMN CONNECTION DETAILS - PH ROOF | DATE: 12-21-70

REVISIONS

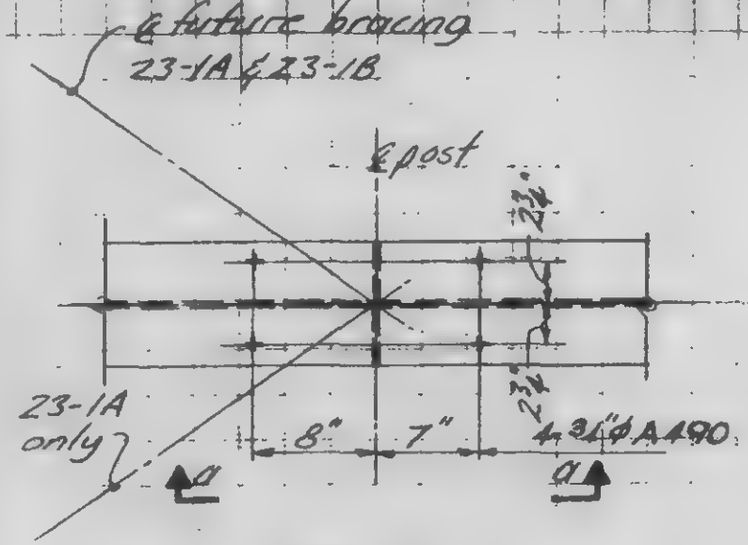

23-1A
23-1B

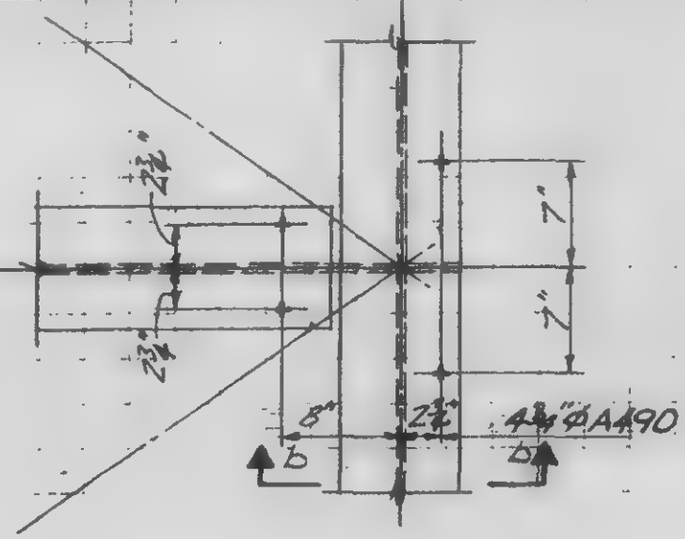

23-1C

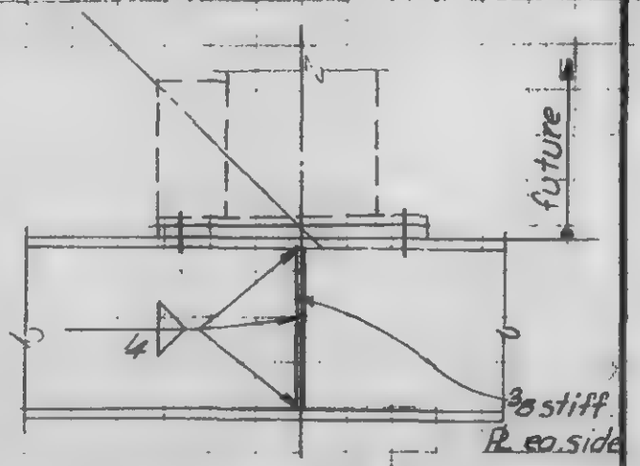

Section a-a

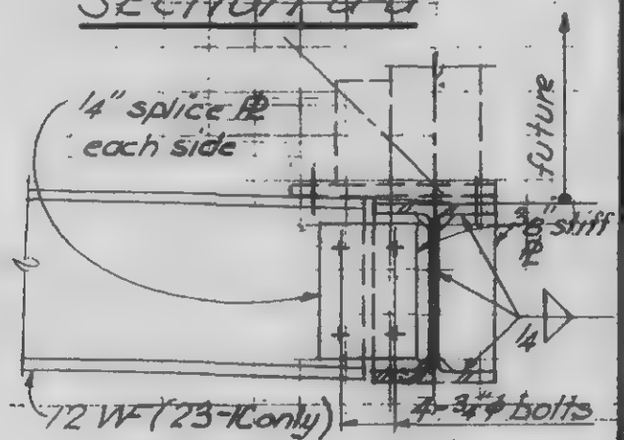

Section b-b

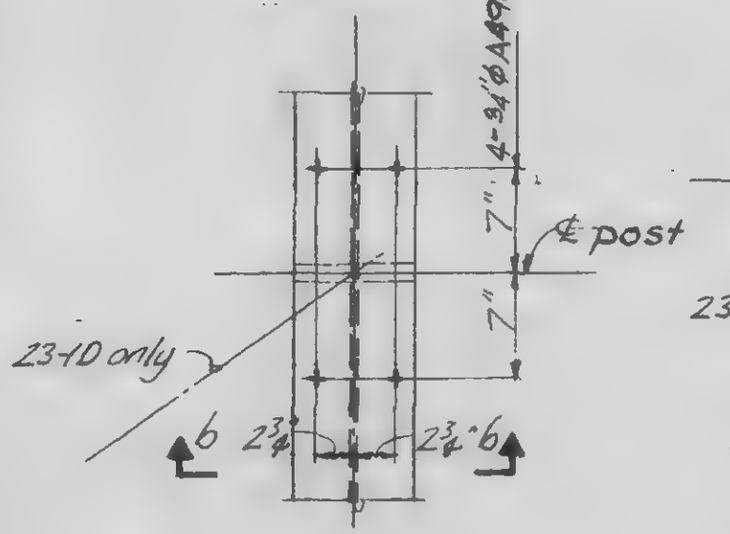

23-1D
23-1F

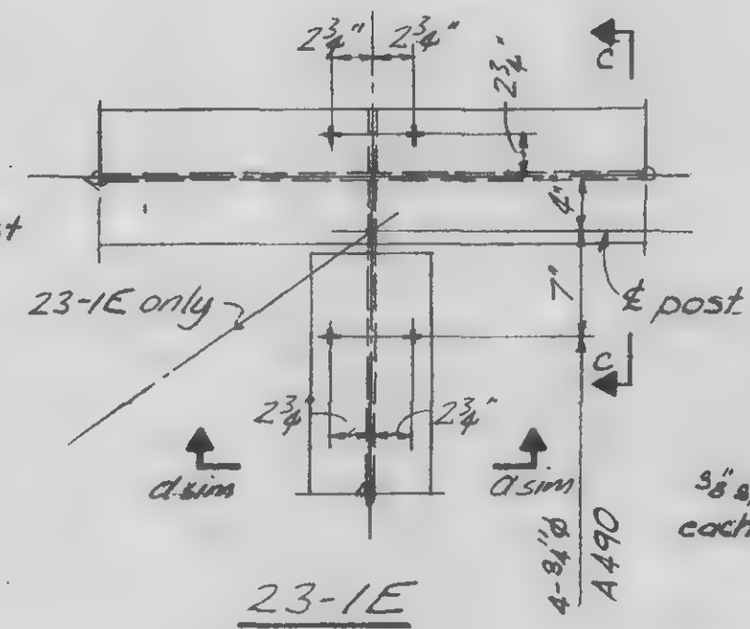

23-1E
23-1G

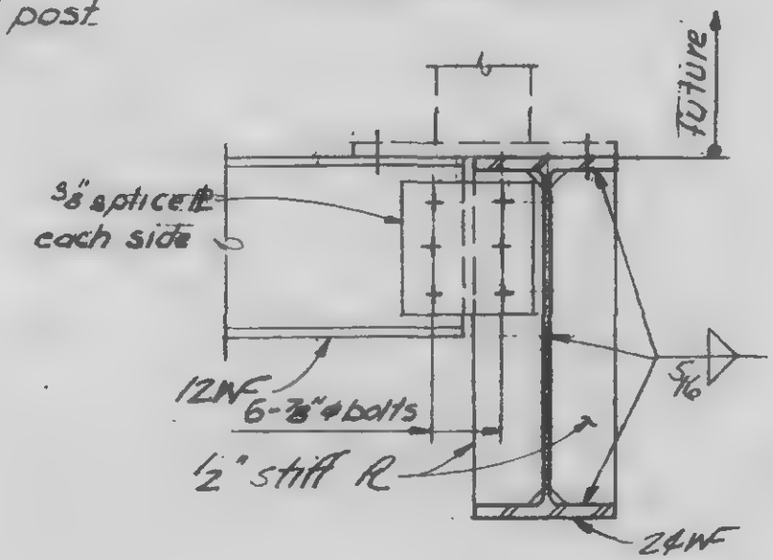

Section c-c

LICENSED PROFESSIONAL ENGINEER — LESLIE E. ROBERTSON — No 34360 — UNIVERSITY OF THE STATE OF NEW YORK

SIGNED

DRAWN J. Adams

REVIEWED

9-B23-1

SKILLING, HELLE, CHRISTIANSEN, ROBERTSON — Structural & Civil Engineers

PROJECT: THE WORLD TRADE CENTER | TITLE: FL. 107-PH CONNECTION DETAILS - POSTS & MISC. | DATE: 4-1-70

REVISIONS

5/27/70

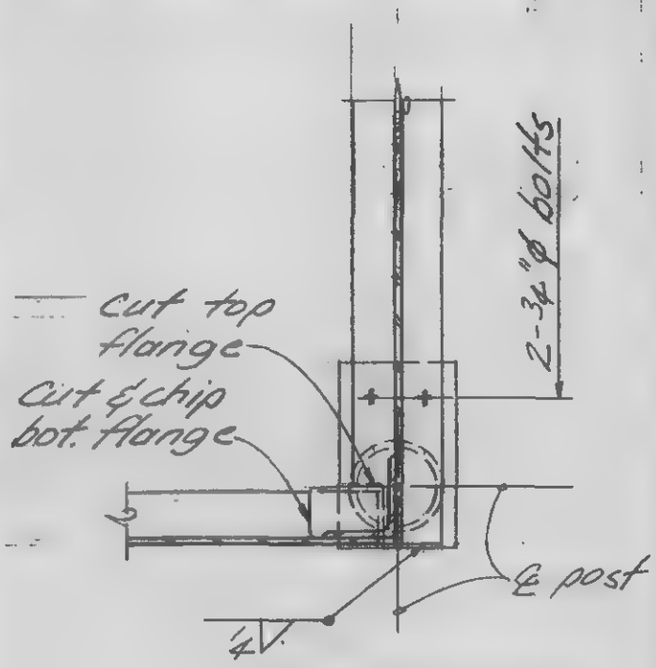

Section a-a

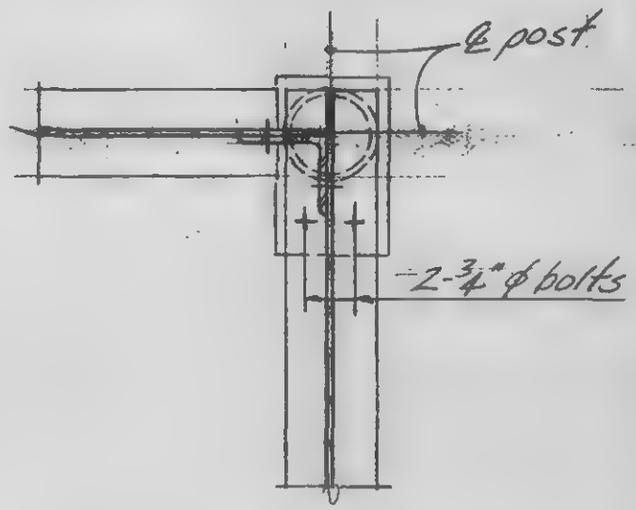

Section b-b

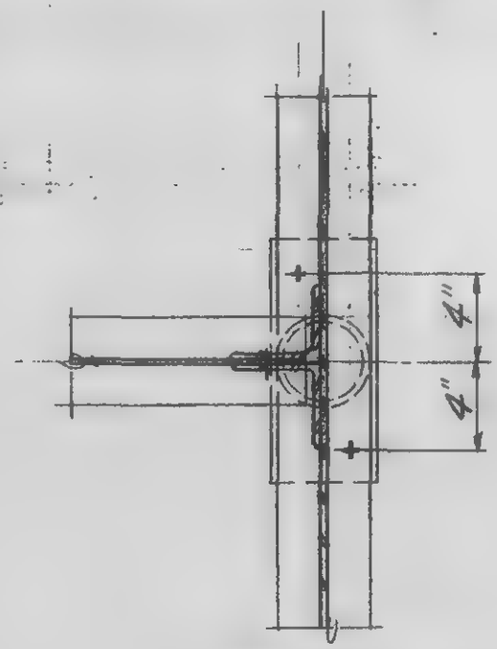

Section c-c

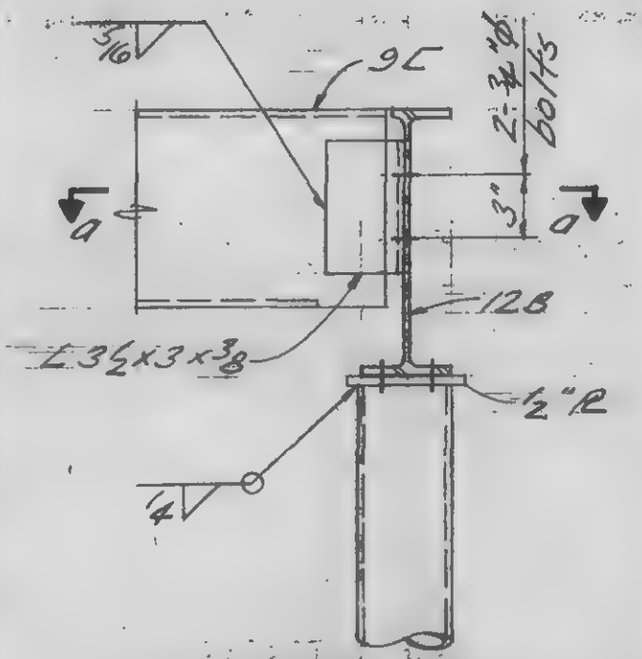

Elevation

Detail 21-2A

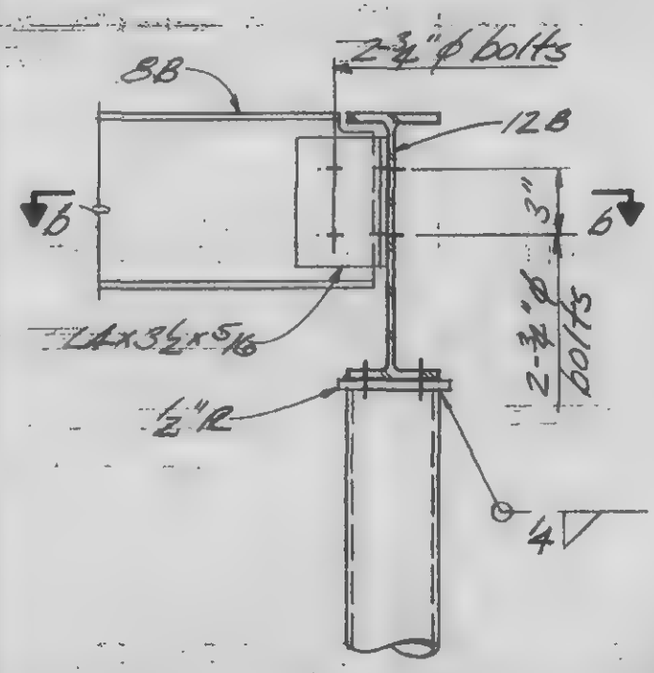

Elevation

Detail 21-2B

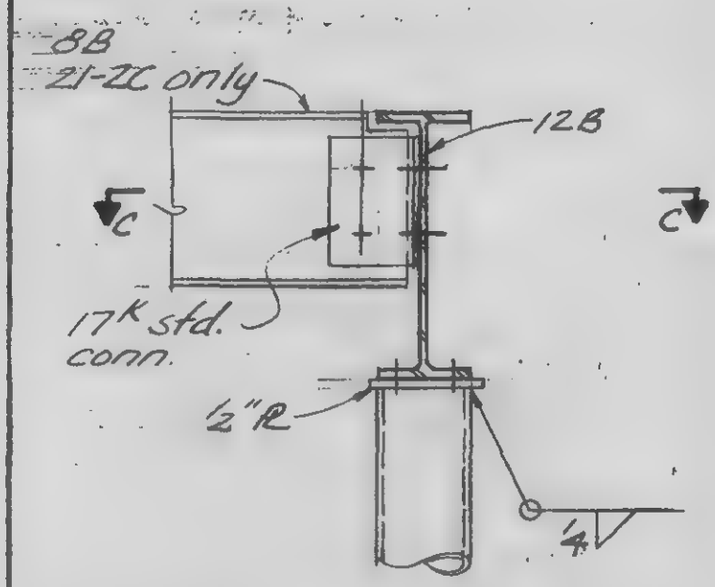

Elevation

Detail 21-2C as noted

Detail 21-2D

LICENSED PROFESSIONAL ENGINEER — LESLIE E. ROBERTSON — No. 34360 — UNIVERSITY OF THE STATE OF NEW YORK

DESIGNED

DRAWN J. Adams

REVIEWED W. Brewer

9-A821-2.1

SKILLING, HELLE, CHRISTIANSEN, ROBERTSON — Structural & Civil Engineers

PROJECT: THE WORLD TRADE CENTER | TITLE: FLOOR 107 - PH CONNECTION DETAILS - POST & MISC | DATE: 4-1-70

REVISIONS

5/27/70

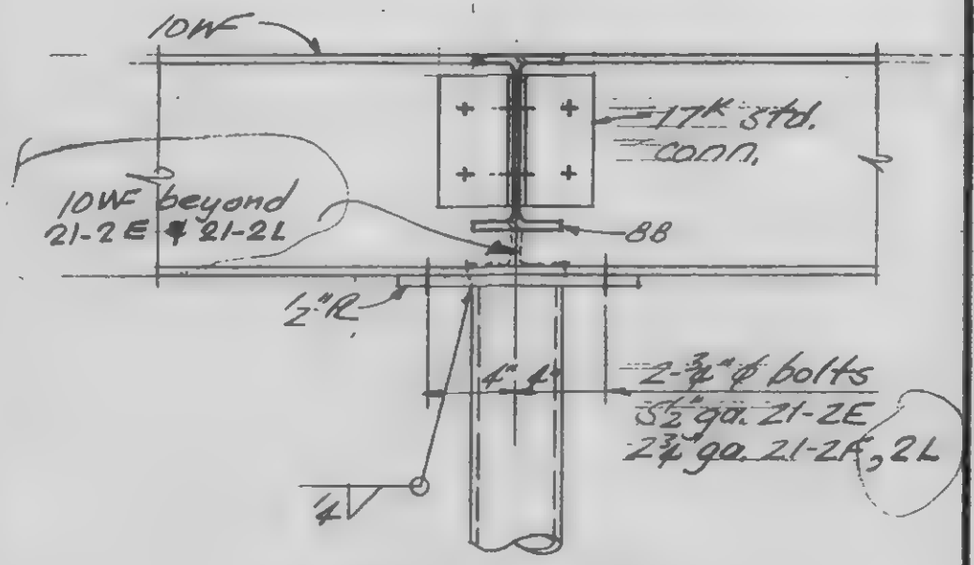

Detail 21-2E
Detail 21-2F & 2L

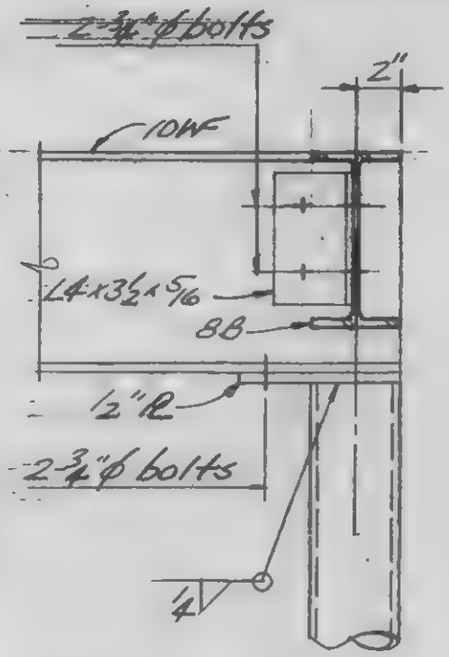

Detail 21-2G

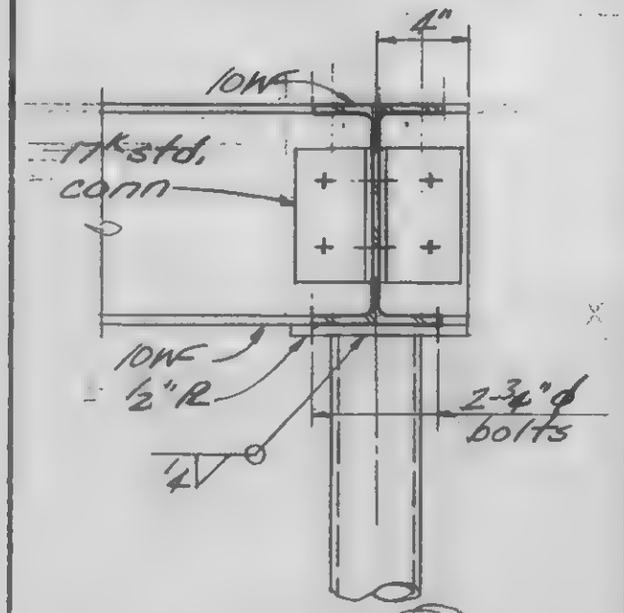

Detail 21-2H

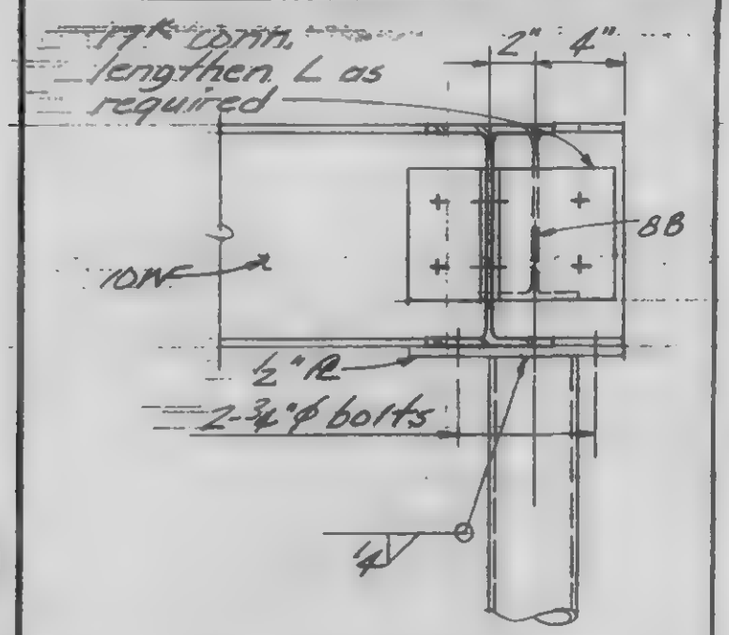

Detail 21-2J

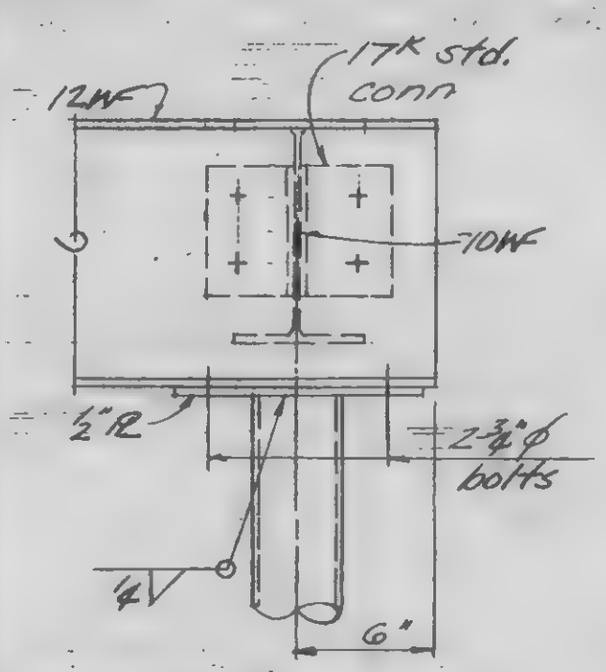

Detail 21-2K

LICENSED PROFESSIONAL ENGINEER — LESLIE E. ROBERTSON — No. 34360 — UNIVERSITY OF THE STATE OF NEW YORK

DESIGNED

DRAWN: J. Adams

REVIEWED: W. Brewer

9-AB21-2.0

SKILLING, HELLE, CHRISTIANSEN, ROBERTSON — Structural & Civil Engineers

PROJECT: THE WORLD TRADE CENTER | TITLE: FL. 107-PH CONNECTION DETAILS-POSTS & MISC | DATE: 4-1-70

REVISIONS

5/27/70

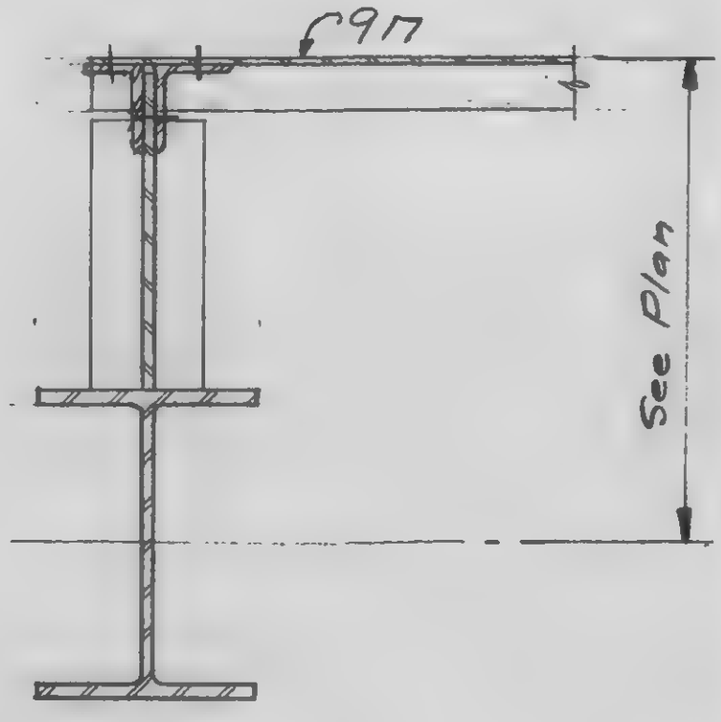

Section a-a

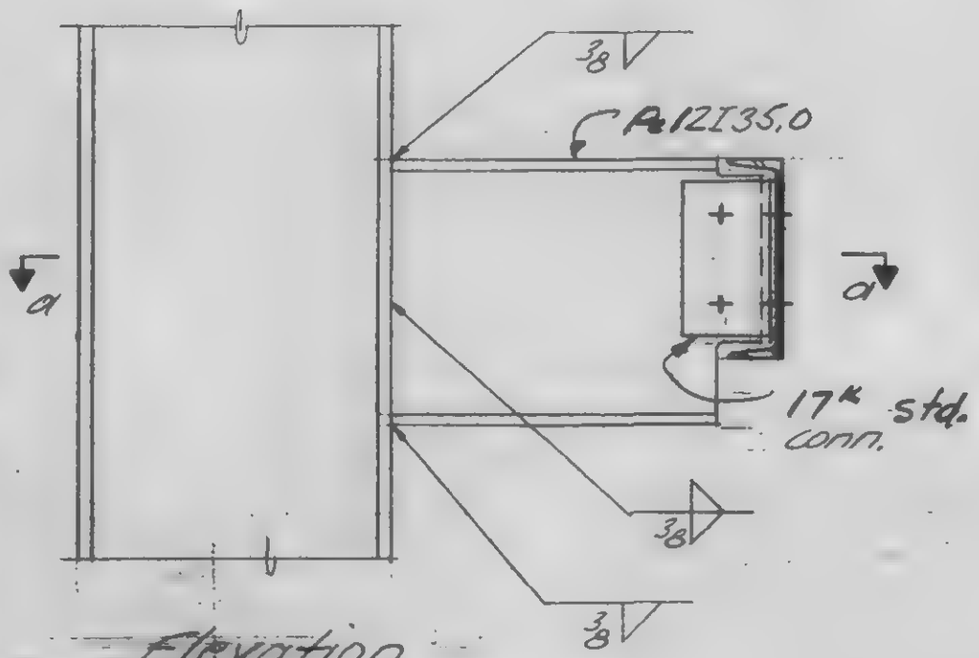

Elevation

Detail 21-3A

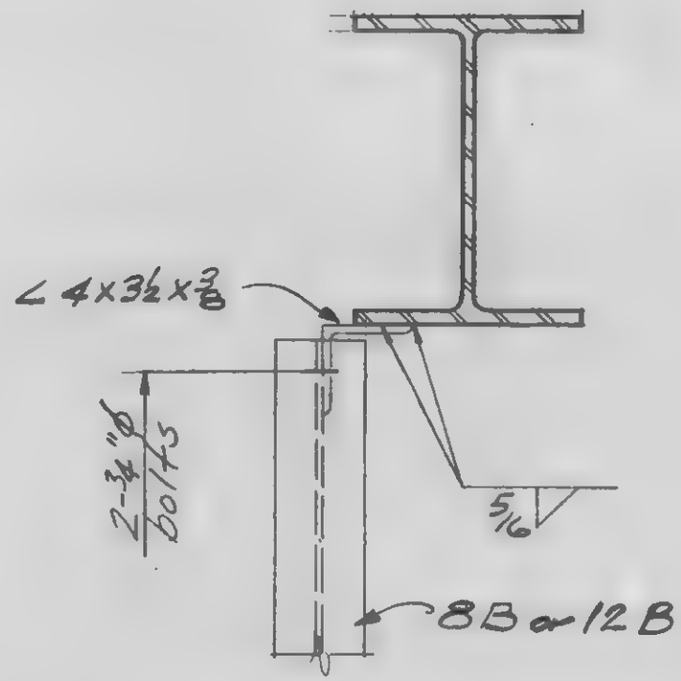

Detail 21-3B

LICENSED PROFESSIONAL ENGINEER — LESLIE E ROBERTSON — No. 34360 — UNIVERSITY OF THE STATE OF NEW YORK

DESIGNED

DRAWN J. Adams

REVIEWED W. Brewer

9-AB21-3.1

SKILLING, HELLE, CHRISTIANSEN, ROBERTSON — Structural & Civil Engineers

PROJECT: THE WORLD TRADE CENTER | TITLE: FL. 107-PH CONNECTION DETAILS-POSTS & MISC | DATE: 4-1-70

REVISIONS

5/27/70

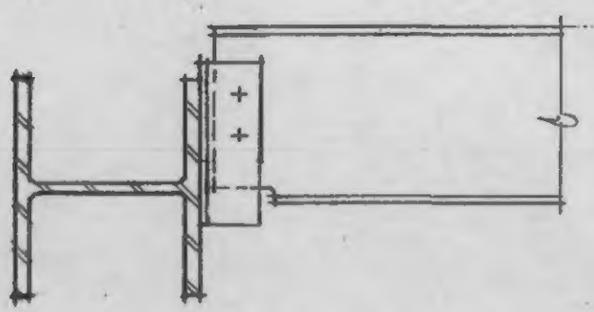

Section a-a

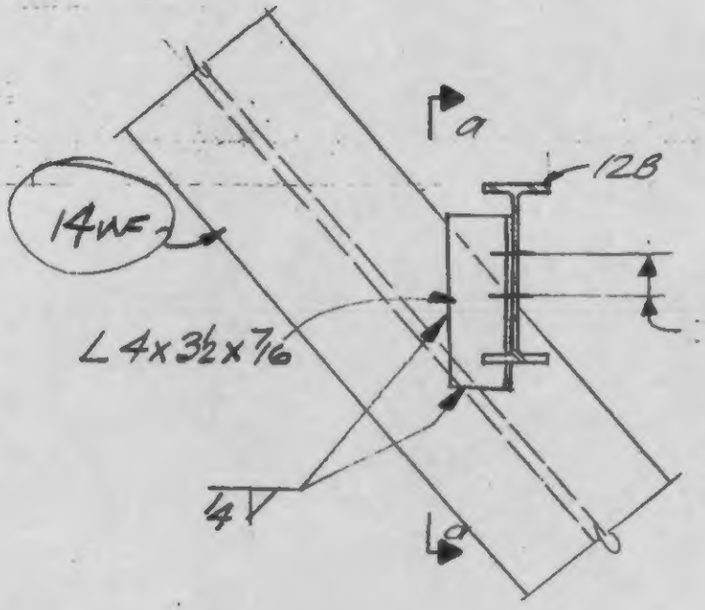

Detail 21-3C

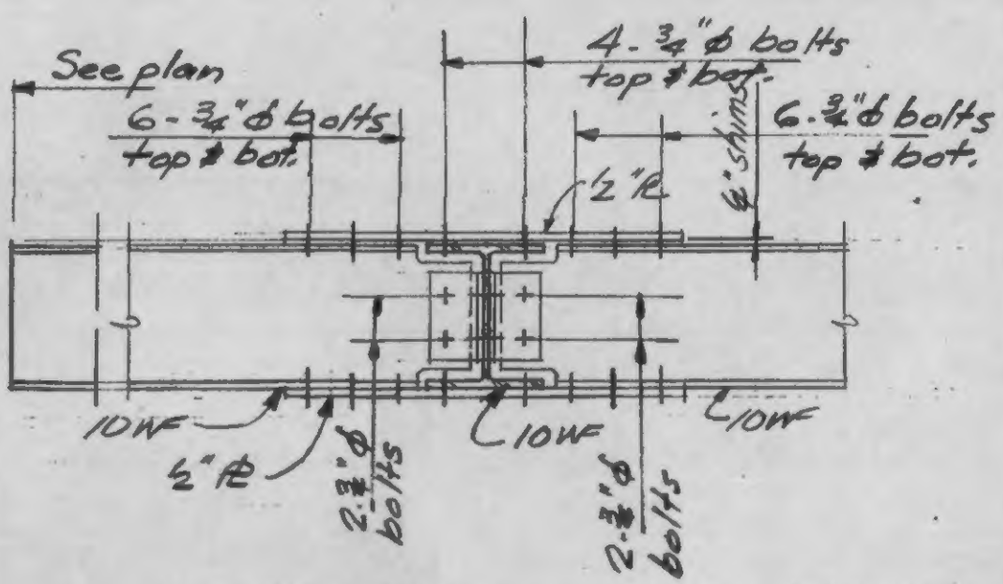

Detail 21-3E

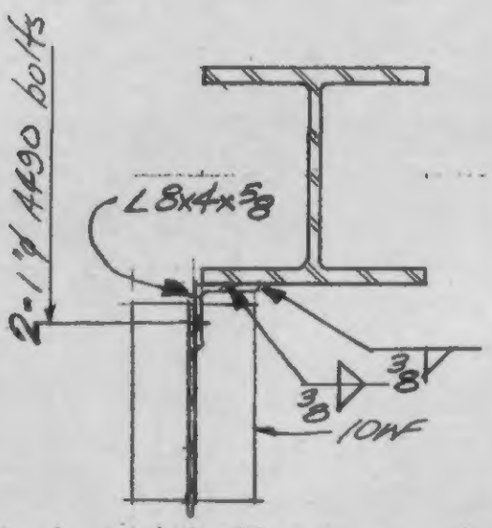

Detail 21-3F

LICENSED PROFESSIONAL ENGINEER — LESLIE E. ROBERTSON — No. 34360 — UNIVERSITY OF THE STATE OF NEW YORK

DESIGNED

DRAWN: J. Adams

REVIEWED: W. Brewer

9-AB21-3.2

SKILLING, HELLE, CHRISTIANSEN, ROBERTSON — Structural & Civil Engineers

PROJECT THE WORLD TRADE CENTER | TITLE EL. 107-PH, CONNECTION DETAILS - POSTS & MISC | DATE 6-15-70

REVISIONS

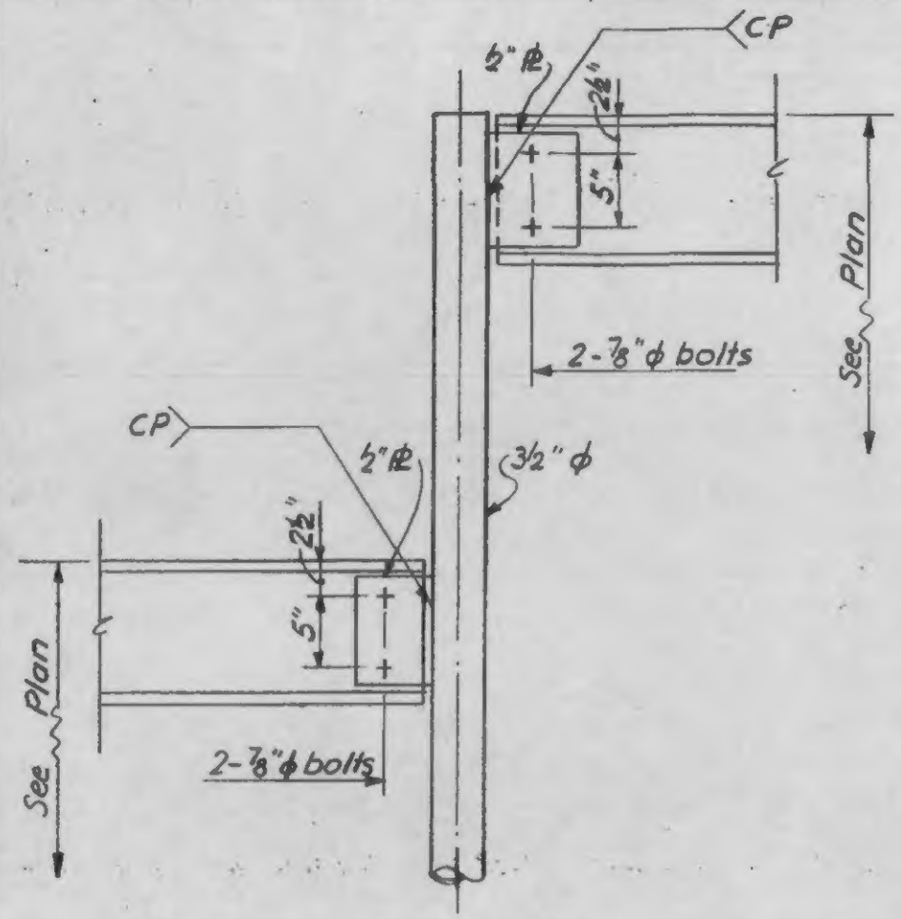

Detail 21-4B

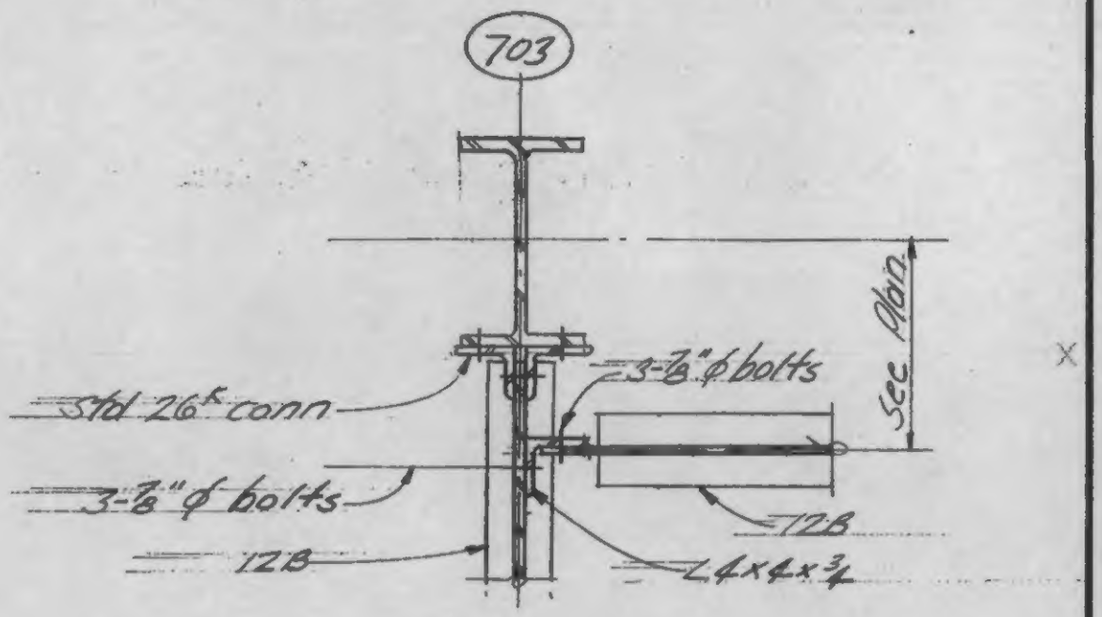

Detail 21-4C

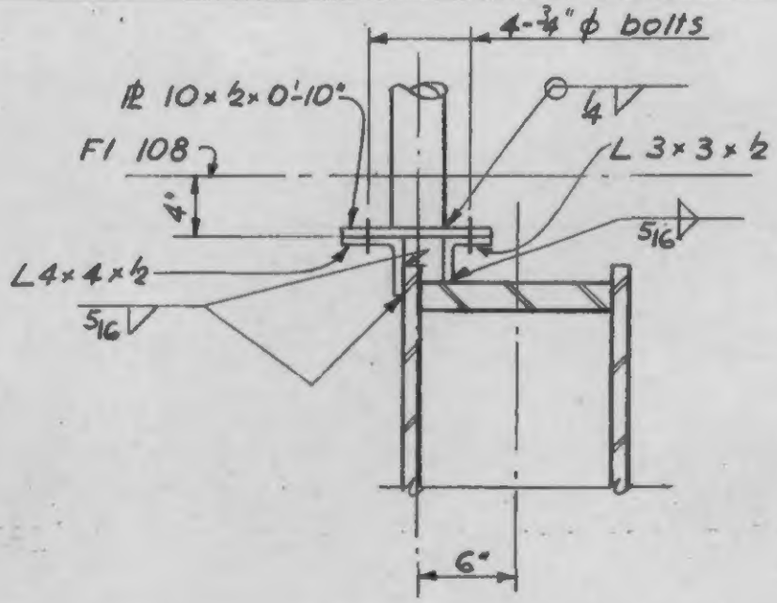

Detail 21-4A

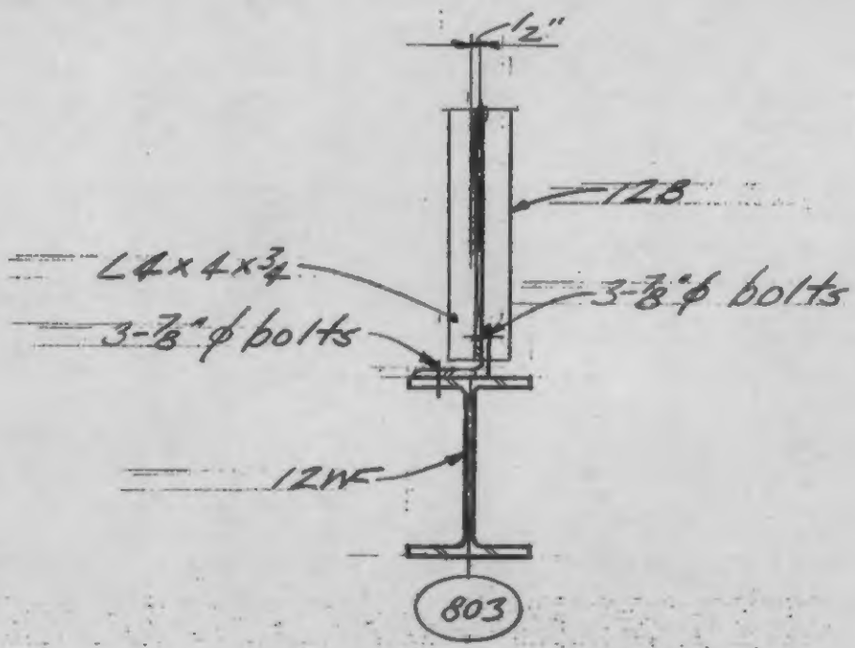

Detail 21-4D

LICENSED PROFESSIONAL ENGINEER — LESLIE E. ROBERTSON — No. 34360 — UNIVERSITY OF THE STATE OF NEW YORK

DESIGNED

DRAWN F. Smith

REVIEWED

9-AB 21-4

SKILLING, HELLE, CHRISTIANSEN, ROBERTSON — Structural & Civil Engineers

PROJECT: THE WORLD TRADE CENTER | TITLE: FL 101-PH CONNECTION DETAIL - FL 109 | DATE: 4-1-70

REVISIONS

6-15-70

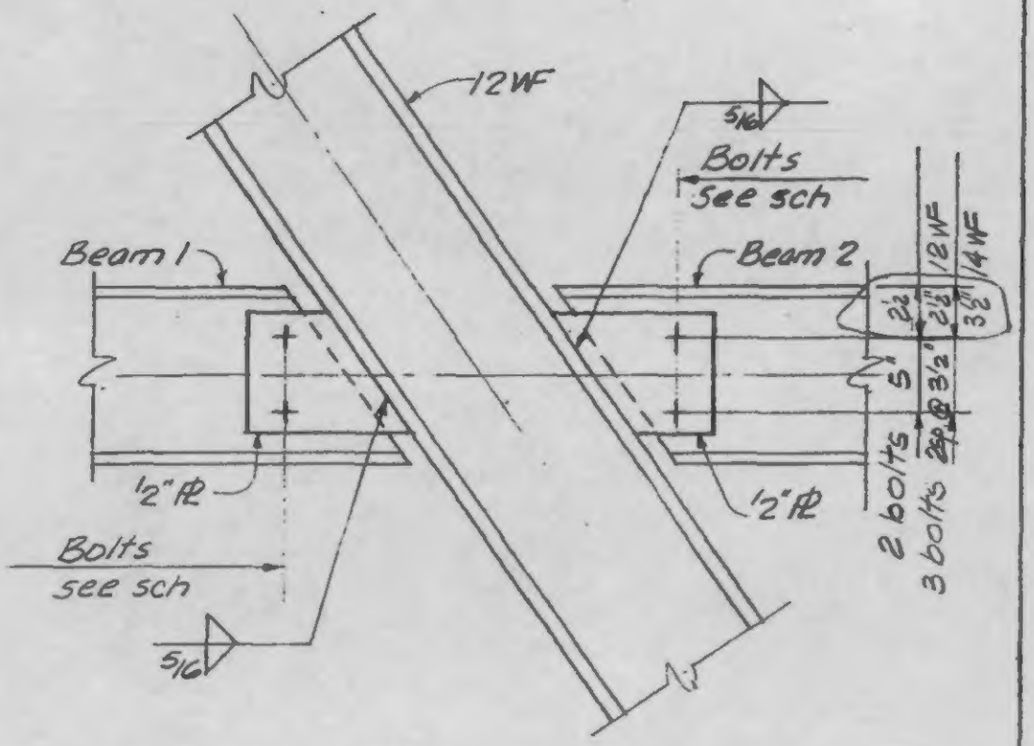

Detail	Beam 1	Bolts	Beam 2	Bolts
22-1A	10WF	2-⅞"ϕ	10WF	2-⅞"ϕ
22-1B	14WF	3-⅞"ϕ	14WF	3-⅞"ϕ
22-1C	12WF	3-⅞"ϕ	12WF	3-⅞"ϕ
22-1D	12WF	3-⅞"ϕ	14WF	3-⅞"ϕ

Detail 22-1A, B, C, D

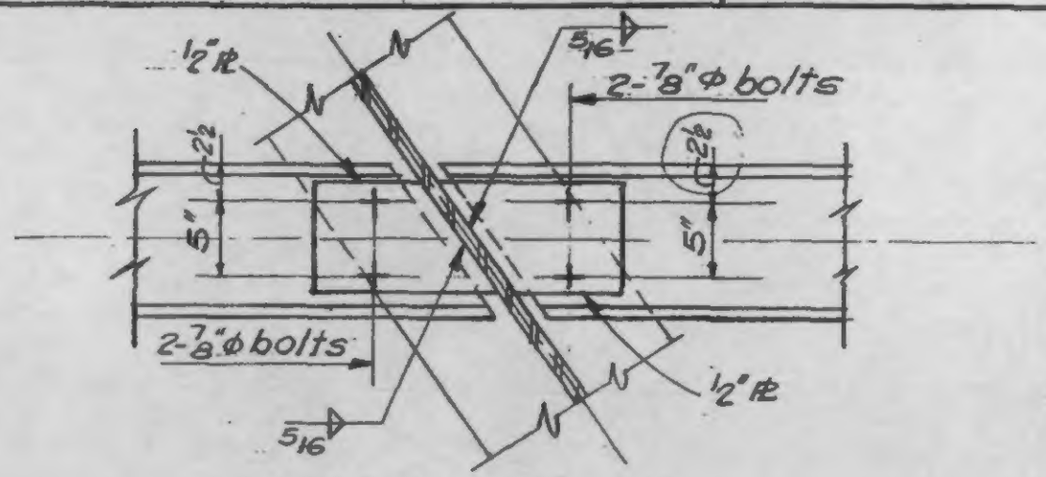

Detail 22-1E

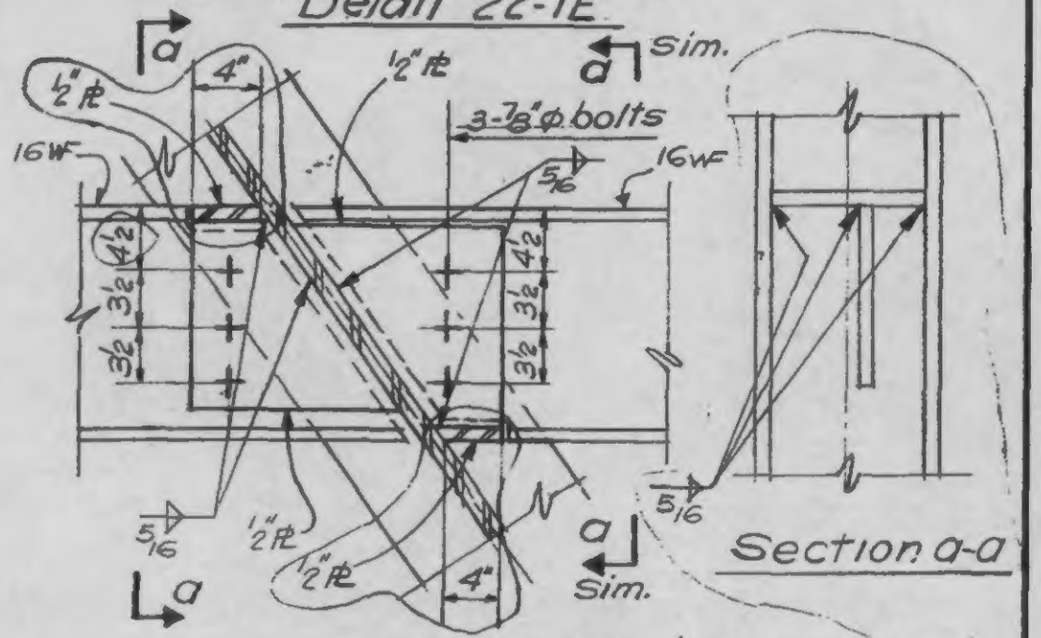

Detail 22-1E & 22-1F

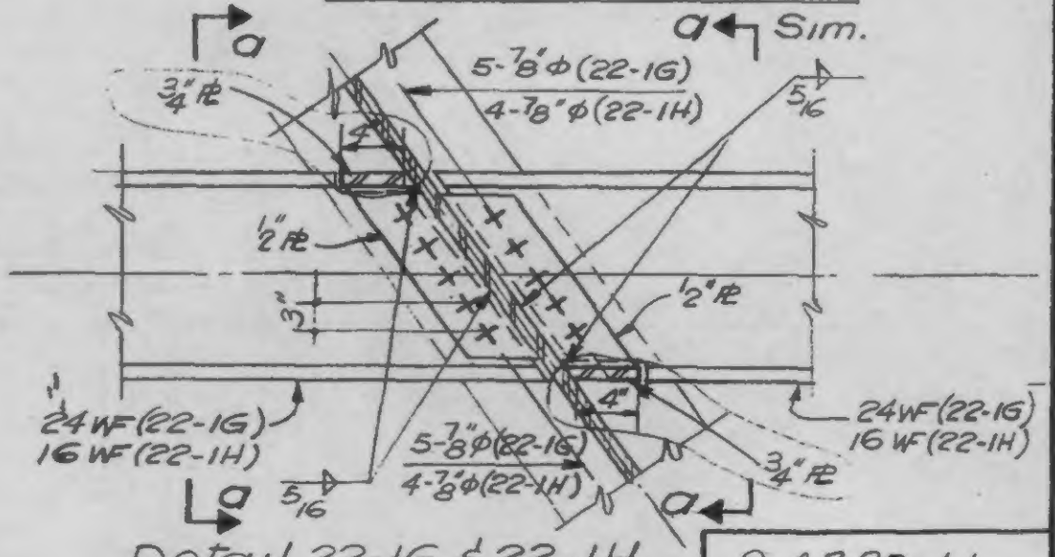

Detail 22-1G & 22-1H

9-AB22-1.1

LICENSED PROFESSIONAL ENGINEER — LESLIE E. ROBERTSON — No. 34960 — UNIVERSITY OF THE STATE OF NEW YORK

DESIGNED

DRAWN V.H.A

REVIEWED ✓

SKILLING, HELLE, CHRISTIANSEN, ROBERTSON — Structural & Civil Engineers

PROJECT: THE WORLD TRADE CENTER

TITLE: FL.107-PH CONNECTION DETAIL - FL.109

DATE: 4-1-70

REVISIONS

6-15-70

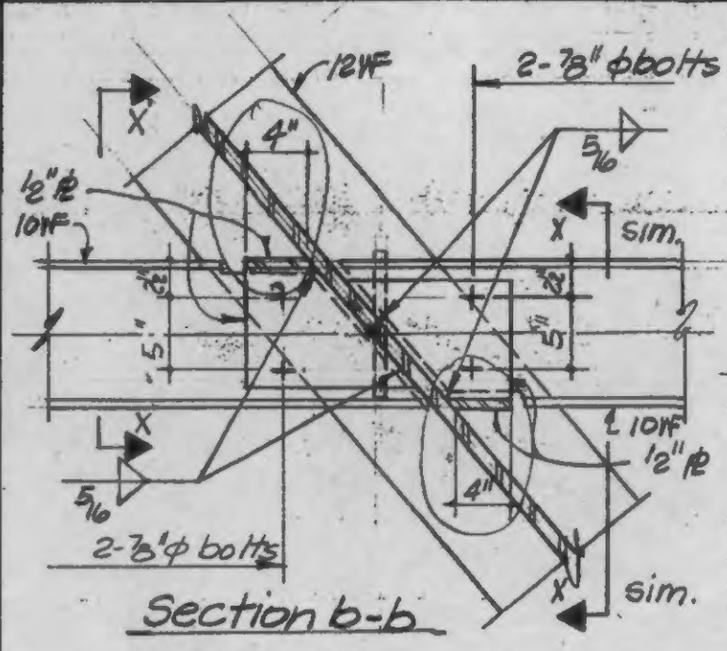

Section b-b

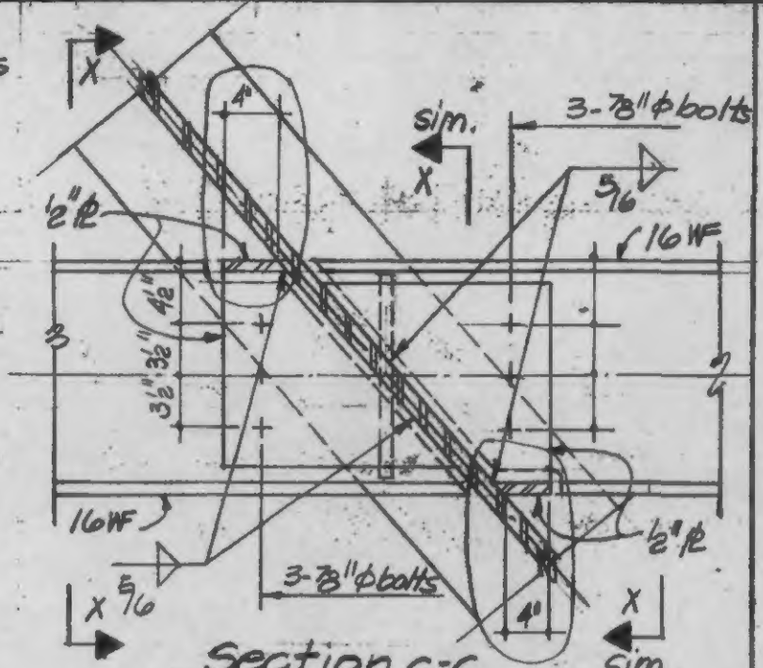

Section c-c

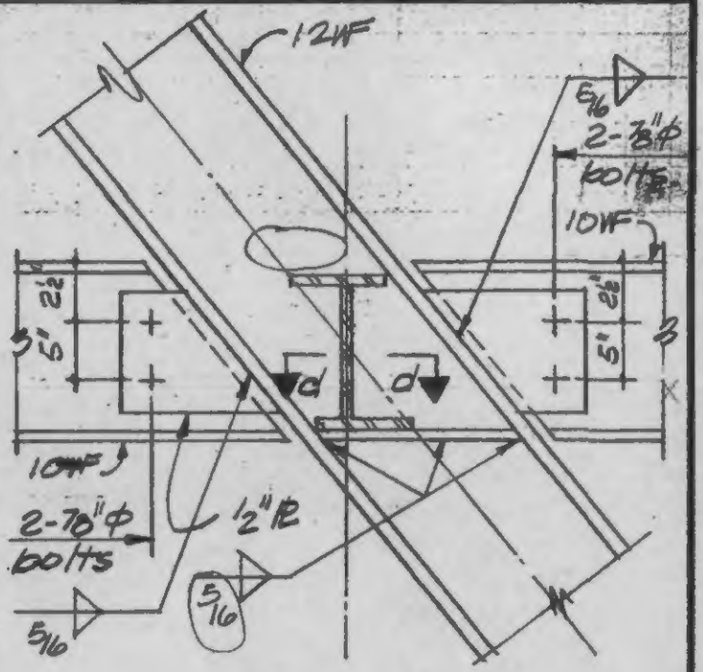

Detail 22-1N

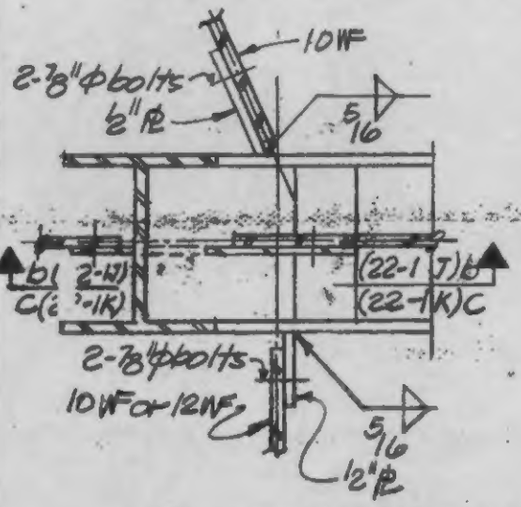

Plan 22-1J & 22-1K

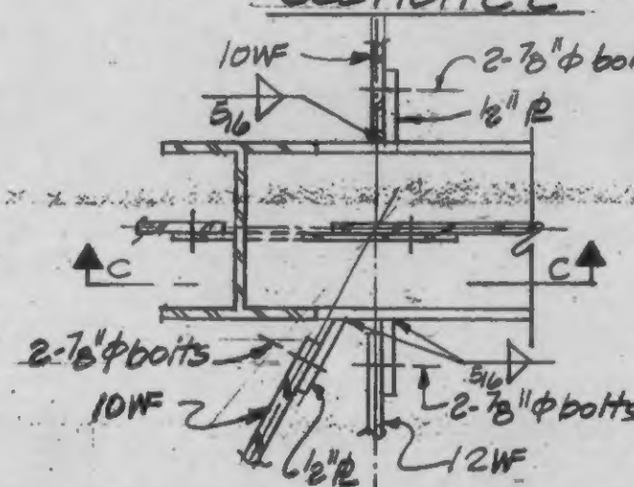

Plan 22-1L

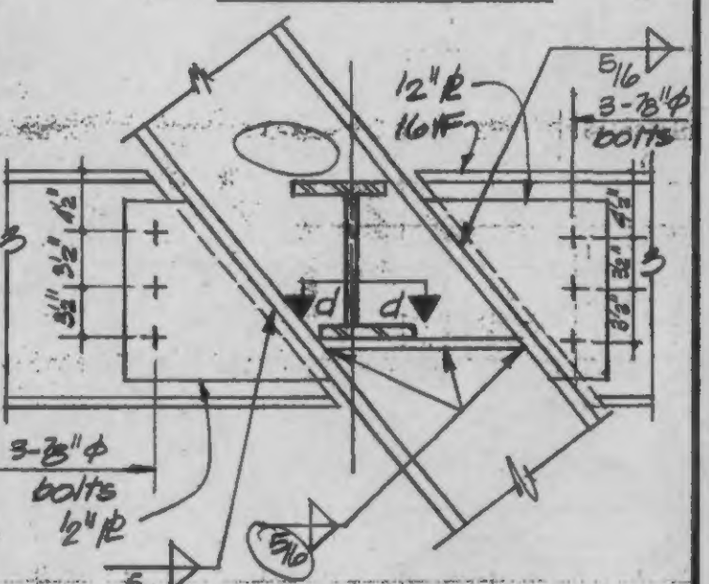

Detail 22-1P

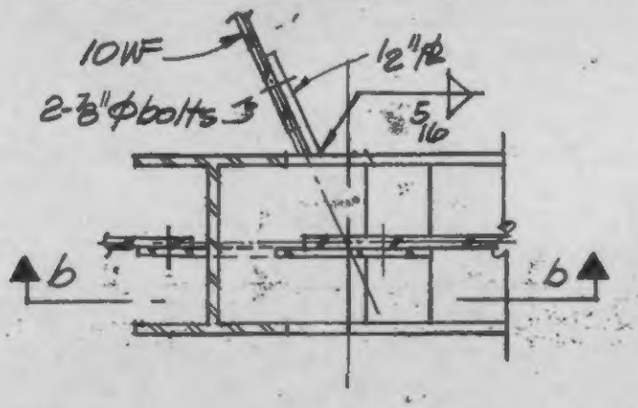

Plan 22-1M

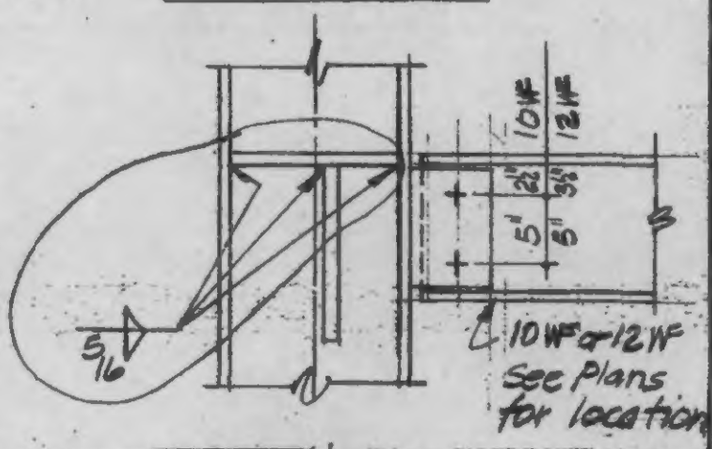

Section x-x

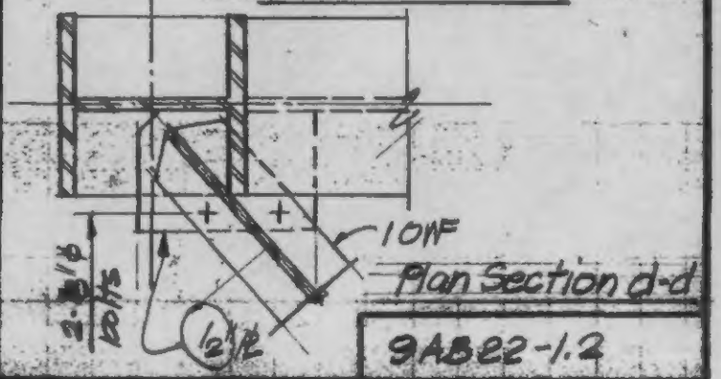

Plan Section d-d

LICENSED PROFESSIONAL ENGINEER — LESLIE E. ROBERTSON — No. 34960 — UNIVERSITY OF THE STATE OF NEW YORK

DESIGNED

DRAWN: F. Ozeki

REVIEWED

9AB22-1.2